Cisco Catalyst 9200CX Compact Series Switches Hardware Installation Guide

First Published: 2022-08-11

Americas Headquarters
Cisco Systems, Inc.
170 West Tasman Drive
San Jose, CA 95134-1706
USA
http://www.cisco.com
Tel: 408 526-4000
800 553-NETS (6387)
Fax: 408 527-0883

CONTENTS

PREFACE

Preface v

Document Conventions v

Related Documentation vii

Obtaining Documentation and Submitting a Service Request vii

CHAPTER 1

Product Overview 1

Switch Models 1

Front Panel Components 1

10/100/1000 Ports 3

PoE and PoE+ Ports 3

C9200CX-12T only PD Port 4

USB Type A Port 4

USB Micro-B Port 4

SD Card Slot 4

Uplink Ports 5

Rear Panel 6

RFID Tag 6

Auxiliary Power Adapter 6

Internal Power Supply 7

Network Configurations 7

CHAPTER 2

Preparing for Installation 9

Safety Warnings 9

Installation Guidelines 11

Site Requirements 12

Temperature 12
Humidity 13
Altitude 13
Dust and Particles 13
Air Quality 13
Corrosion 14
EMI and Radio Frequency Interference 15
Power Source Interruptions 16
System Grounding 17
Maintaining Safety with Electricity 18
Verifying Switch Operation 19

CHAPTER 3
Installing a Compact Switch 21
Shipping Box Contents 21
Mounting the Switch 23
Mounting on a Desk or Shelf Without Mounting Screws 23
Mounting using the Mounting Tray and Screws 24
Mounting using the Mounting Tray and Magnet 27
Mounting Under a Desk or a Shelf 30
Mounting the Switch Using Rack Mount Brackets 34
Mounting the Switch on a DIN Rail 35
Connecting the System Ground 37
Attaching the Adapter Bracket to the Switch (Optional) 38
Installing the Power Cord Retainer (Optional) 41
Installing the Cable Guard (Optional) 43
Installing an SFP or SFP+ Module 45
10/100/1000 PoE and PoE+Port Connections 46
10/100/1000 Ethernet Port Connections 47
Auto-MDIX Connections 48

CHAPTER 4
Configuring the Switch 49
Configuring the Switch Using the Web User Interface 49
Configuring the Switch Using the CLI 49
Accessing the CLI Through the Console Port 49

Connecting the RJ45 Console Port 49
Connecting the USB Console Port 50
Installing the Microsoft Windows USB Device Driver 50
Installing the Cisco Microsoft Windows USB Driver 51
Uninstalling the Cisco Microsoft Windows USB Driver 51
Uninstalling the Cisco Microsoft Windows USB Driver 51

APPENDIX A
Technical Specifications 53
Environmental and Physical Specifications 53

APPENDIX B
Switch LEDs 55
LEDs 55
System LED 56
Status (STAT) LED 57
Speed LED 57
PoE LED 57
Port LEDs and Modes 57
PD Power LED 59
Beacon LED 59

Preface

This preface describes the conventions of this document and information on how to obtain other documentation. It also provides information on what's new in Cisco product documentation.

- Document Conventions , on page v
- Related Documentation, on page vii
- Obtaining Documentation and Submitting a Service Request, on page vii

Document Conventions

This document uses the following conventions:

Convention	Description
^ or Ctrl	Both the ^ symbol and Ctrl represent the Control (Ctrl) key on a keyboard. For example, the key combination **^D** or **Ctrl-D** means that you hold down the Control key while you press the D key. (Keys are indicated in capital letters but are not case sensitive.)
bold font	Commands and keywords and user-entered text appear in **bold** font.
Italic font	Document titles, new or emphasized terms, and arguments for which you supply values are in *italic* font.
`Courier` font	Terminal sessions and information the system displays appear in `courier` font.
`Bold Courier` font	**`Bold Courier`** font indicates text that the user must enter.
[x]	Elements in square brackets are optional.
...	An ellipsis (three consecutive nonbolded periods without spaces) after a syntax element indicates that the element can be repeated.
|	A vertical line, called a pipe, indicates a choice within a set of keywords or arguments.
[x | y]	Optional alternative keywords are grouped in brackets and separated by vertical bars.

Convention	Description
{x | y}	Required alternative keywords are grouped in braces and separated by vertical bars.
[x {y | z}]	Nested set of square brackets or braces indicate optional or required choices within optional or required elements. Braces and a vertical bar within square brackets indicate a required choice within an optional element.
string	A nonquoted set of characters. Do not use quotation marks around the string or the string will include the quotation marks.
< >	Nonprinting characters such as passwords are in angle brackets.
[ ]	Default responses to system prompts are in square brackets.
!, #	An exclamation point (!) or a pound sign (#) at the beginning of a line of code indicates a comment line.

Reader Alert Conventions

This document may use the following conventions for reader alerts:

Note Means *reader take note*. Notes contain helpful suggestions or references to material not covered in the manual.

Tip Means *the following information will help you solve a problem.*

Caution Means *reader be careful*. In this situation, you might do something that could result in equipment damage or loss of data.

Timesaver Means *the described action saves time.* You can save time by performing the action described in the paragraph.

Warning IMPORTANT SAFETY INSTRUCTIONS

Before you work on any equipment, be aware of the hazards involved with electrical circuitry and be familiar with standard practices for preventing accidents. Read the installation instructions before using, installing, or connecting the system to the power source. Use the statement number provided at the end of each warning statement to locate its translation in the translated safety warnings for this device. Statement 1071

SAVE THESE INSTRUCTIONS

Related Documentation

Note Before installing or upgrading the switch, refer to the switch Release Notes.

- Cisco Catalyst 9200 Series Switches documentation, located at: https://www.cisco.com/c/en/us/products/switches/catalyst-9200-series-switches/index.html
- Cisco Transceiver Modules documentation, including compatibility matrixes, located at:

  http://www.cisco.com/en/US/products/hw/modules/ps5455/tsd_products_support_series_home.html
- Cisco Validated Designs documents, located at:

  http://www.cisco.com/go/designzone

Obtaining Documentation and Submitting a Service Request

For information on obtaining documentation, submitting a service request, and gathering additional information, see the monthly *What's New in Cisco Product Documentation*, which also lists all new and revised Cisco technical documentation, at:

http://www.cisco.com/c/en/us/td/docs/general/whatsnew/whatsnew.html

Subscribe to the *What's New in Cisco Product Documentation* as a Really Simple Syndication (RSS) feed and set content to be delivered directly to your desktop using a reader application. The RSS feeds are a free service and Cisco currently supports RSS version 2.0.

CHAPTER 1

Product Overview

- Switch Models, on page 1
- Front Panel Components, on page 1
- Rear Panel, on page 6
- Network Configurations, on page 7

Switch Models

The Cisco Catalyst 9200CX Series switches have three compact (C9200CX) switch models. The following tables describe all the available Cisco Catalyst 9200CX Series switches and the features supported.

Table 1: C9200CX Compact Switch Models and Descriptions

Switch Model	Description
C9200CX-8P-2X2G	8x1G PoE+ ports; 2x1G and 2x10G SFP+ fixed uplink ports; powered using 315W internal power supply unit; fanless.
C9200CX-12P-2X2G	12x1G PoE+ ports; 2x1G and 2x10G SFP+ fixed uplink ports; powered using 315W internal power supply unit; fanless.
C9200CX-12T-2X2G	12x1G Ethernet ports; 3x1G Copper and 2x10G SFP+ uplink ports; provides power either from one of the 3 copper uplink ports as Class 6 PD port or using an external auxiliary power adapter; fanless.

Front Panel Components

This section describes the front panel components of Cisco Catalyst 9200CX Series switches :

- 8 or 12 downlink ports of one of the following types:
  - 10/100/1000
  - 10/100/1000 PoE+
- 1G/10G Uplink ports

- USB Type A storage port
- USB micro-Type B console port
- LEDs
- Blue Beacon
- SD card slot
- Internal power supply connector for compact switches

Front Panel of a C9200CX-12P-2X2G Switch

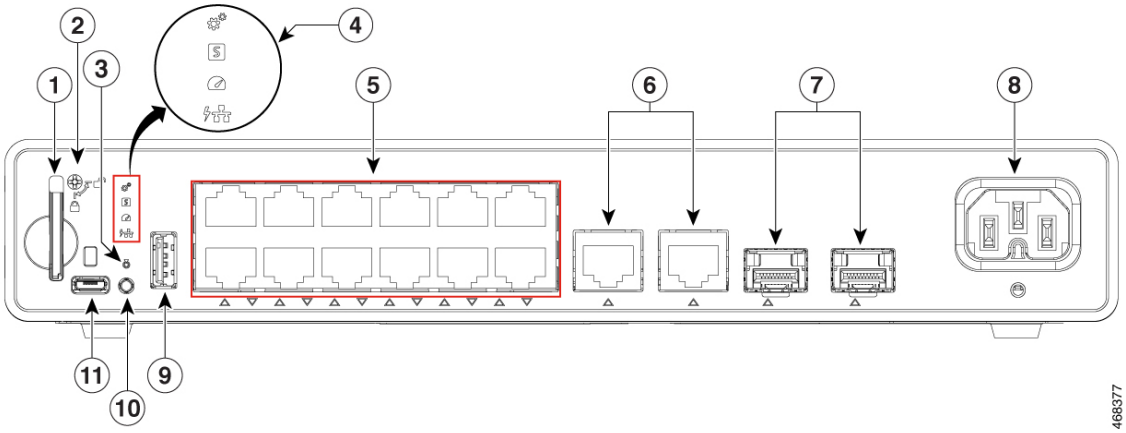

1	SD Card slot	7	2x10G SFP+ uplink ports
2	SD Card security lock	8	Internal power supply connector
3	Blue Beacon	9	USB Type A connector
4	Status LEDs	10	Mode button
5	10/100/1000 PoE+ ports	11	USB micro-Type B (console) port
6	2x1G copper uplink ports	-	-

Front Panel of a C9200CX-12T-2X2G Switch

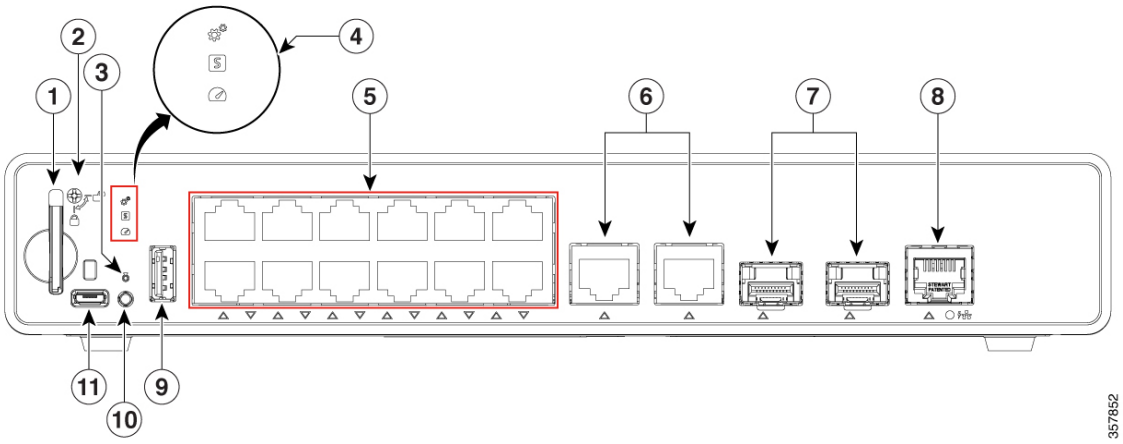

1	SD Card slot	7	2x10G SFP+ uplink ports
2	SD Card security lock	8	1G copper uplink PD port
3	Blue Beacon	9	USB Type A connector
4	Status LEDs	10	Mode button
5	10/100/1000 Ethernet downlink ports	11	USB micro-Type B (console) port
6	2x1G copper uplink ports	-	-

10/100/1000 Ports

The 10/100/1000 ports use RJ-45 connectors with Ethernet pinouts. The maximum cable length is 328 feet (100 meters). The 100BASE-TX and 1000BASE-T traffic requires twisted pair (UTP) cable of Category 5 or higher. The 10BASE-T traffic can use Category 3 cable or higher.

PoE and PoE+ Ports

The PoE and PoE+ ports provide the following functionality:

- PoE/PoE+ ports: Support for IEEE 802.3af-compliant powered devices (up to 15.4W PoE per port) and support for IEEE 802.3at-compliant powered devices (up to 30W PoE+ per port).
- Support for pre-standard Cisco powered devices.
- Configurable support for Cisco intelligent power management, including enhanced power negotiation, power reservation, and per-port power policing.

See the Internal Power Supply, on page 7 for the power supply matrix that defines the available PoE and PoE+ power per port. The PoE circuit has been evaluated to meet the limits for Limited Power Source (LPS) per Annex Q in IEC/UL 62368-1. It has also been evaluated as a class ES1, PS2.

C9200CX-12T only PD Port

The PD port on C9200CX-12T switches is a 802.3bt class 6 port capable of powering the switch. It can deliver PoE power of 51W to power the switch as an alternative to the auxiliary power input. The PD power is mutually exclusive from the auxiliary power input and power input takes priority when used.

USB Type A Port

The USB Type A port provides access to external USB flash devices (also known as thumb drives or USB keys).

The port supports Cisco USB flash drives with capacities from 128 MB to 8 GB. USB devices with port densities of 128 MB, 256 MB, 1 GB, 4 GB, and 8 GB are supported. Cisco IOS software provides standard file system access to the flash device: read, write, erase, and copy, as well as the ability to format the flash device with a FAT file system.

It provides you with the ability to automatically upgrade the internal flash with the USB drive's configuration and image for emergency switch recovery using USB auto-upgrade. This feature checks the internal flash for a bootable image and configuration and if either image or the configuration is not available, then the USB drive is checked for boot images and configuration. If the boot image and configuration are available, these are copied to flash for the reboot.

USB Micro-B Port

The USB Micro-B port on the front panel that provides administrative access to the switch through a console terminal or a PC. It allows you to use a PC, Mac, or Linux machine with the appropriate drivers to connect to the USB micro Type-B port and gain access to the console port on the switch.

Alternatively, if you want to access the console using an RJ45 connection, you must use the Cisco USB micro-B to RJ45 adapter.

SD Card Slot

Cisco Catalyst 9200CX compact switches support an SD (Secure Digital) Card that extends the onboard flash storage memory on the switch.

The SD card can be used instead of the internal flash memory of the switch to update or restore configuration settings. Additionally, the SD card can be used to boot the switch. You can boot a switch from its internal flash memory or from an SD card; SD card takes precedence over internal flash memory. You can also copy IOS software and switch configuration settings from a PC or from the switch to the SD card, and then use the SD card to copy this software and settings to other switches.

You can access an SD card using the switch boot loader or the command prompt.

Figure 1: SD Card Slot

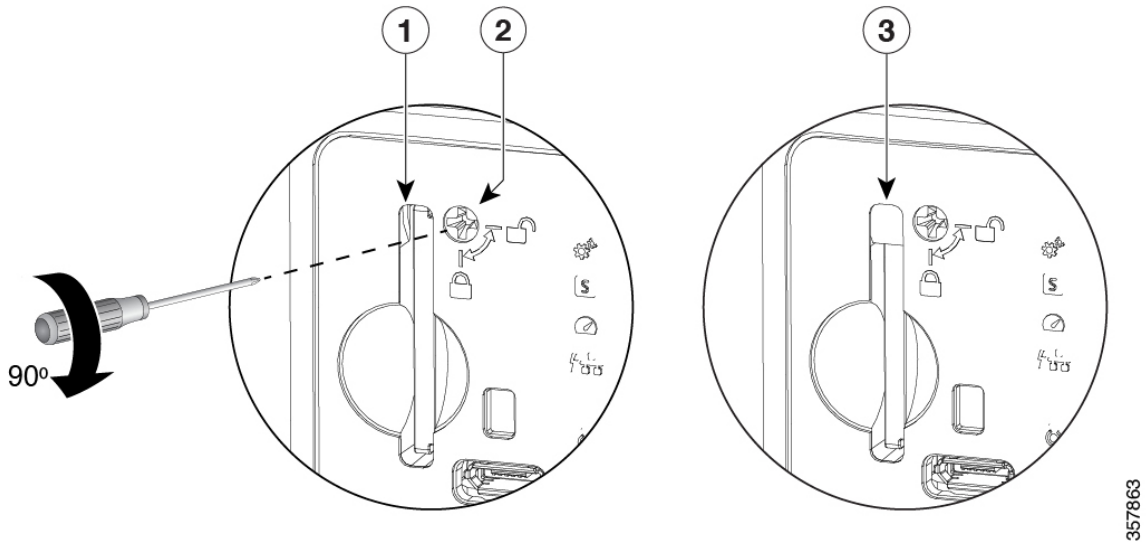

1	SD Card slot in unlocked position	3	SD Card slot in locked position
2	SD lock **Note** Carefully rotate the SD lock at 90^0 to lock or unlock the SD card slot. Do not not apply excessive pressure while rotating the lock to the extreme end, to prevent it from damaging.		

Uplink Ports

The C9200CX compact switches provide fixed uplink ports that support 10G SFP+ and 1G SFP modules. For information about installing an optic module, see Installing an SFP or SFP+ Module, on page 45. The SFP+ uplink ports and copper uplink ports on the switch can function simultaneously.

Rear Panel

Figure 2: Rear Panel of a C9200CX-12T-2X2G Switch

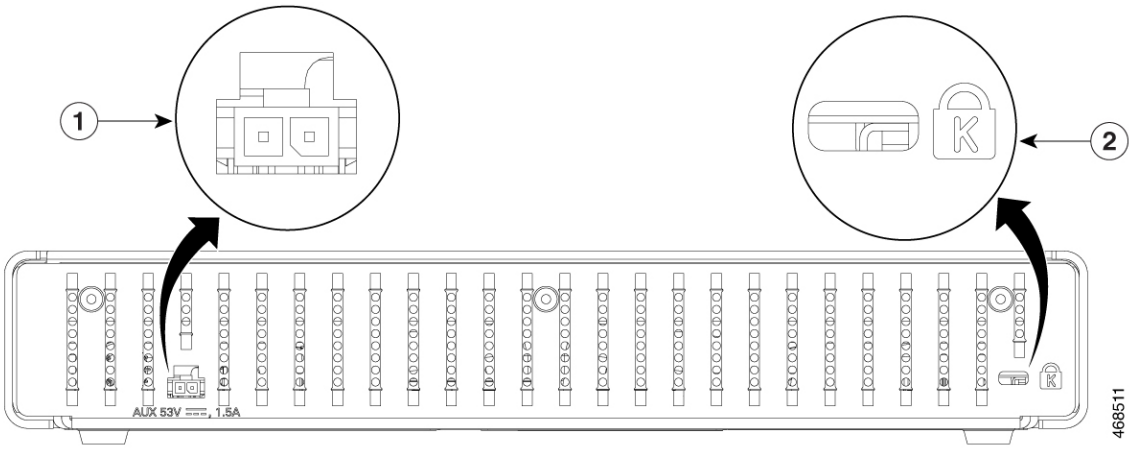

1	Auxiliary power connector	2	Security lock slot **Note** The security slot on the C9200CX-8P-2X2G and C9200CX-12P-2X2G switches are available on the left side of the rear panel.

RFID Tag

The switch has a built-in, front-facing, passive RFID tag that uses UHF RFID technology and requires an RFID reader with compatible software. It provides auto-identification capabilities for asset management and tracking. The RFID tags are compatible with the Generation 2 GS1 EPC Global Standard and are ISO 18000-6C compliant. They operate in the 860- to 960-MHz UHF band. For more information, see Radio Frequency Identification (RFID) on Cisco Catalyst 9000 Family Switches White Paper.

Auxiliary Power Adapter

C9200CX-12T-2X2G switches can be powered either through the 1G copper uplink port connected to a PoE PSE port capable of providing IEEE 802.3bt Class 6 power or through an auxiliary AC-DC(PWR-ADPT) or DC-DC(C9K-ADPT-DC) power adapter. If the switch has both PD power and auxiliary power adapter connected, the auxiliary power takes precedence over PD power and the PD port gets disabled. If both are connected and the auxiliary power source is removed, the switch resets for the PD to perform detection and classification before providing power to the system.

You can order the AC-DC power adapter with the switch, or you can order it later from your Cisco representative.

Internal Power Supply

All the compact switches except C9200CX-12T-2X2G are powered through internal power supplies. The internal power supply is an autoranging unit that supports input voltages between 100 and 240 VAC (max of 90V to 264V). The AC frequency range of the power supply is 50Hz/60Hz. Plug the AC power cord into the AC power connector and into an AC power outlet.

Table 2: Available PoE with AC Power Supply

Models	Default Power Supply	Available PoE
C9200CX-12P-2X2G	315W Internal	240W
C9200CX-8P-2X2G	315W Internal	240W

Network Configurations

See the switch software configuration guide for network configuration concepts and examples of using the switch to create dedicated network segments and interconnecting the segments through Fast Ethernet and Gigabit Ethernet connections.

CHAPTER 2

Preparing for Installation

- Safety Warnings, on page 9
- Installation Guidelines, on page 11
- Site Requirements, on page 12
- Verifying Switch Operation, on page 19

Safety Warnings

This section includes the basic installation caution and warning statements. Read this section before you start the installation procedure. Translations of the warning statements appear in the Regulatory Compliance and Safety Information guide on Cisco.com.

Warning Before working on equipment that is connected to power lines, remove jewelry (including rings, necklaces, and watches). Metal objects will heat up when connected to power and ground and can cause serious burns or weld the metal object to the terminals. Statement 43

Warning Ethernet cables must be shielded when used in a central office environment. Statement 171

Warning Read the wall-mounting instructions carefully before beginning installation. Failure to use the correct hardware or to follow the correct procedures could result in a hazardous situation to people and damage to the system. Statement 378

Warning Do not work on the system or connect or disconnect cables during periods of lightning activity. Statement 1001

Warning Read the installation instructions before connecting the system to the power source. Statement 1004

Warning To prevent bodily injury when mounting or servicing this unit in a rack, you must take special precautions to ensure that the system remains stable. The following guidelines are provided to ensure your safety:

- This unit should be mounted at the bottom of the rack if it is the only unit in the rack.
- When mounting this unit in a partially filled rack, load the rack from the bottom to the top with the heaviest component at the bottom of the rack.
- If the rack is provided with stabilizing devices, install the stabilizers before mounting or servicing the unit in the rack.

Statement 1006

Warning Class 1 laser product. Statement 1008

Warning The plug-socket combination must be accessible at all times, because it serves as the main disconnecting device. Statement 1019

Warning Use copper conductors only. Statement 1025

Warning This unit might have more than one power supply connection. All connections must be removed to de-energize the unit. Statement 1028

Warning Only trained and qualified personnel should be allowed to install, replace, or service this equipment. Statement 1030

Warning Ultimate disposal of this product should be handled according to all national laws and regulations. Statement 1040

Warning To prevent the system from overheating, do not operate it in an area that exceeds the maximum recommended ambient temperature of: <113°F (45°C). Statement 1047

Warning This warning symbol means danger. You are in a situation that could cause bodily injury. Before you work on any equipment, be aware of the hazards involved with electrical circuitry and be familiar with standard practices for preventing accidents. Use the statement number provided at the end of each warning to locate its translation in the translated safety warnings that accompanied this device. Statement 1071

Warning No user-serviceable parts inside. Do not open. Statement 1073

Warning Installation of the equipment must comply with local and national electrical codes. Statement 1074

Warning To prevent airflow restriction, allow clearance around the ventilation openings to be at least: 3 inches (7.6 cm). Statement 1076

Warning Hot surface. Statement 1079

Installation Guidelines

When determining where to install the switch, verify that these guidelines are met:

- Clearance to the switch front and rear panel meets these conditions:
  - Front-panel LEDs can be easily read.
  - AC power cord reaches from the power outlet to the connector on the switch.
- Cabling is away from sources of electrical noise, such as radios, power lines, and fluorescent lighting fixtures. Make sure that the cabling is safely away from other devices that might damage the cables.
- Installation temperature should be measured within 1 inches from the sides of the switch. Airflow around the switch and through the vents is unrestricted. To avoid any airflow blockage, we recommend the following:
  - Allow at least 3 inches (7.6 cm) of clearance around the switch.
  - When placing the switch on a flat horizontal surface, attach the rubber feet to the switch.
- Maximum installation temperature may be limited by the SFPs used. Refer to the datasheet for specific restrictions.
- For 10/100/1000 fixed ports, cable lengths from the switch to connected devices can be up to 328 feet (100 meters).

- Temperature around the unit should not exceed 45°C below 5,000 feet. For more information, see Temperature.
- Humidity around the switch does not exceed 95 percent. For more information, see Humidity.
- Altitude at the installation site is not greater than 5,000 feet. For more information, see Altitude.
- Install this equipment in an environment as free from dust and foreign conductive material (such as metal flakes from construction activities) as is possible. Dust and other particles causing contaminant buildup inside the chassis can result in system malfunction. For more information, see Air Quality and Corrosion.

For more information on choosing a location for the switch installation, see Site Requirements.

Site Requirements

Planning a proper location for the switch and layout of the equipment rack or wiring closet is essential for successful system operation. These sections describe some of the basic site requirements that you should be aware of as you prepare to install your switch, including the following:

- Environmental factors can adversely affect the performance and longevity of your system.
- Install the switch in an enclosed, secure area, ensuring that only qualified personnel have access to the switch and control of the environment.
- Equipment that is placed too closely together or that is inadequately ventilated may cause system over-temperature conditions, leading to premature component failure.
- Poor equipment placement can make chassis panels inaccessible and difficult to maintain.
- The switch requires a dry, clean, well-ventilated, and air-conditioned environment.
- To ensure normal operation, maintain ambient airflow. If the airflow is blocked or restricted, or if the intake air is too warm, an over-temperature condition may occur. The switch environmental monitor may then shut down the system to protect the system components.

Temperature

Temperature extremes may cause a system to operate at reduced efficiency and cause a variety of problems, including premature aging and failure of chips, and failure of mechanical devices. Extreme temperature fluctuations may also cause chips to become loose in their sockets. Observe the following guidelines:

- Ensure that the chassis has adequate ventilation.
- Do not place the chassis within a closed-in wall unit or on top of cloth, which can act as insulation.
- Do not place the chassis where it will receive direct sunlight, particularly in the afternoon.
- Do not place the chassis next to a heat source of any kind, including heating vents.
- Adequate ventilation is particularly important at high altitudes. Make sure that all the slots and openings on the system remain unobstructed.
- Clean the installation site at regular intervals to avoid buildup of dust and debris, which may cause a system to overheat.

- If system is exposed to abnormally low temperatures, allow a two hour warm up period, in ambient temperature no lower than 32°F (0 °C) before turning on.

Failure to observe these guidelines may damage the chassis' internal components.

Humidity

High-humidity conditions may cause moisture to enter the system, and cause corrosion of internal components and degradation of properties such as electrical resistance, thermal conductivity, physical strength, and size. Extreme moisture buildup inside the system may result in electrical short circuit, which may cause serious damage to the system. Each system is rated for storage and operation in 10 to 95 percent relative humidity, non-condensing with a humidity gradation of 10 percent per hour. Buildings in which climate is controlled by air-conditioning in the warmer months and by heat during the colder months usually maintain an acceptable level of humidity for system equipment. However, if a system is located in an unusually humid location, a dehumidifier should be used to maintain the humidity within an acceptable range.

Altitude

Operating a system at high altitude (low pressure) reduces the efficiency of forced and convection cooling and may result in electrical problems related to arcing and corona effects. This condition may also cause sealed components with internal pressure, such as electrolytic capacitors, to fail or perform at reduced efficiency.

Dust and Particles

Dust and other particles, if ingested, cause contaminant buildup in the system and increase the internal chassis temperature. A clean operating environment can greatly reduce the negative effects of dust and other particles, which act as insulators and interfere with the mechanical components in the system. The standards listed below provide guidelines for acceptable working environments and acceptable levels of suspended particulate matter:

- National Electrical Manufacturers Association (NEMA) Type 1
- International Electrotechnical Commission (IEC) IP-20

Air Quality

Dust is everywhere and often invisible to the naked eye. It consists of fine particles in the air that originate from various sources, such as soil dust lifted by weather, from volcanic eruptions, or pollution. Dust at an installation site may contain small amounts of textile, paper fibers, or minerals from outdoor soil. It may also contain natural contaminants, such as chlorine from the marine environment and industrial contaminants such as sulfur. Ionized dust and debris are dangerous and get attracted to electronic equipment.

The accumulation of dust and debris on electronic equipment has the following adverse effects:

- It increases the operating temperature of the equipment. According to the Arrhenius effect, an increase in the operating temperature leads to a decrease in reliability and life of the equipment.
- The moisture and corrosive elements that are present in the dust can corrode the electronic or mechanical components and cause premature board failure.

Note In addition to the guidelines mentioned in ANSI 71-04-2013 regulations, follow all applicable guidelines as per site conditions to remove or minimize other contaminants.

Corrosion

Corrosion is a chemical reaction that occurs between electronic components and gases which results in metal deterioration. Corrosion attacks edge connectors, pin connectors, IC plug-in sockets, wirewraps, and all other metal components. Depending on the type and concentration level of the corrosive gases, performance degradation of the components occurs either rapidly or over a period of time. It also leads to blocked currents, brittle connection points, and overheated electrical systems. Corrosion by-products form insulating layers on circuits and causes electronic failure, short circuits, pitting, and metal loss.

A type of corrosion known as creep corrosion, that primarily affects PCBA (Printed Circuit Board Assembly) occurs when the PCBA is subjected to a harsh, and sulfur-rich (hydrogen sulfide) end-use environment over a prolonged period of time. The corrosion begins on certain exposed metals, such as copper and silver, and then creeps along the remaining metal surface either causing electrical short circuits or creating holes. Creep corrosion also occurs on electronic components such as resistors and PCBs.

To prevent corrosion, remove or minimize the presence of dust and particulates at the installation site by following the guidelines mentioned in ANSI 71-04-2013 regulations.

Figure 3: A PCB with Corrosion on its Metal Contacts

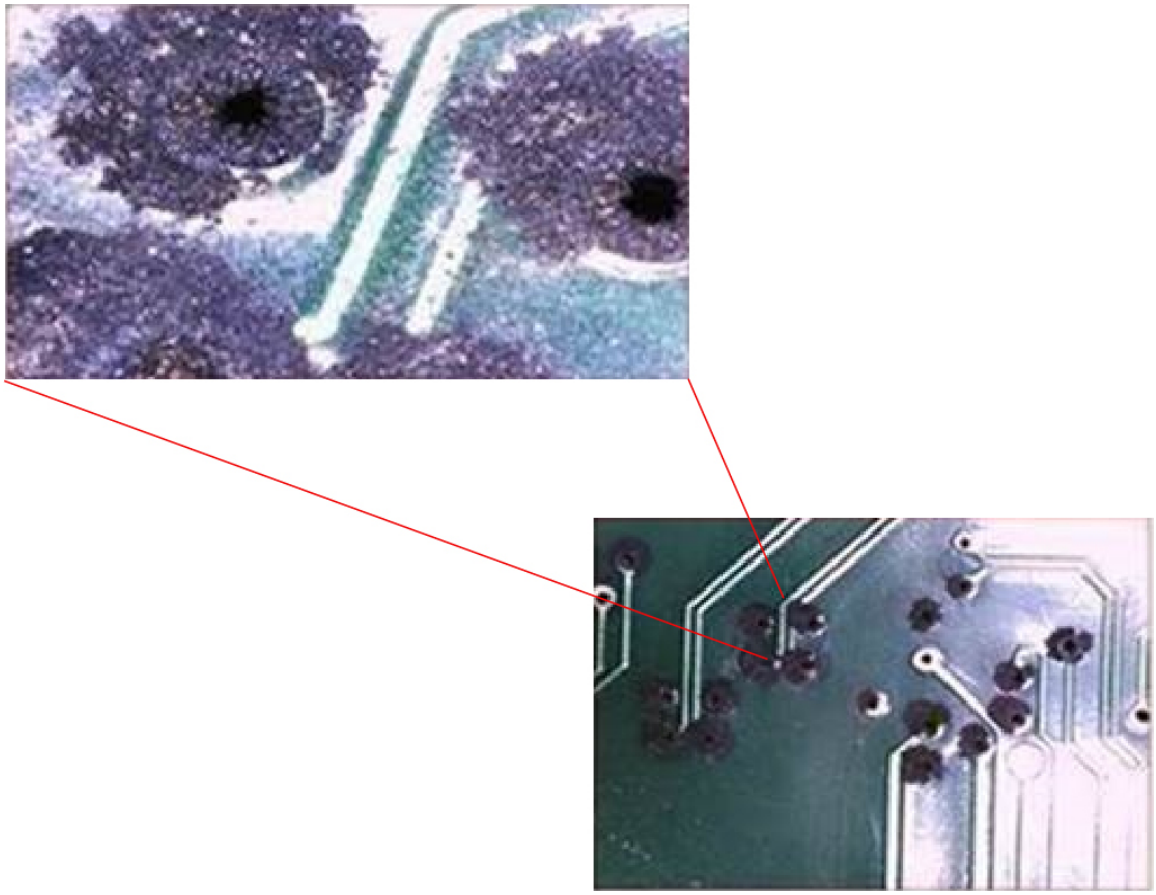

EMI and Radio Frequency Interference

Electro-Magnetic interference (EMI) and radio frequency interference (RFI) from a system can adversely affect devices such as radio and television (TV) receivers operating near the system. Radio frequencies emanating from a system can also interfere with cordless and low-power telephones. Conversely, RFI from high-power telephones can cause spurious characters to appear on the system monitor. RFI is defined as any EMI with a frequency above 10 kilohertz (kHz). This type of interference can travel from the system to other devices through the power cable and power source, or through the air in the form of transmitted radio waves. The Federal Communications Commission (FCC) publishes specific regulations to limit the amount of EMI and RFI emitted by computing equipment. Each system meets these FCC regulations.

When wires are run for any significant distance in an electromagnetic field, interference can occur between the field and the signals on the wires. This fact has two implications for the construction of plant wiring:

- Bad wiring practice can result in radio interference emanating from the plant wiring.
- Strong EMI, especially when it is caused by lightning or radio transmitters, can destroy the signal drivers and receivers in the chassis, and even create an electrical hazard by conducting power surges through lines into equipment.

Note To predict and provide a remedy for strong EMI, consult experts in RFI.

If you use twisted-pair cable in your plant wiring with a good distribution of grounding conductors, the plant wiring is unlikely to emit radio interference. If you exceed the recommended distances, use a high-quality twisted-pair cable with one ground conductor for each data signal when applicable.

If the wires exceed the recommended distances, or if wires pass between buildings, give special consideration to the effect of a lightning strike in your vicinity. The electromagnetic pulse caused by lightning or other high-energy phenomena can easily couple enough energy into unshielded conductors to destroy electronic devices. If you have had problems of this sort in the past, you may want to consult experts in electrical surge suppression and shielding.

Warning The intra-building ports (Copper Based Ethernet Ports) of the equipment or subassembly is suitable for connection to intra-building or unexposed wiring or cabling only. The intra-building ports of the equipment or subassembly MUST NOT be metallically connected to interfaces that connect to the Out Side Plant (OSP) or its wiring for more than 6 meters (approximately 20 feet). These interfaces are designed for use as intra-building interfaces only (Type 2, 4, or 4a ports as described in GR-1089) and require isolation from the exposed OSP cabling. The addition of Primary Protectors is not sufficient protection in order to connect these interfaces metallically to an OSP wiring system.

Power Source Interruptions

Systems are especially sensitive to variations in voltage supplied by the AC power source. Overvoltage, undervoltage, and transients (or spikes) can erase data from memory or even cause components to fail. To protect against these types of problems, power cables should always be properly grounded. Also, place the system on a dedicated power circuit (rather than sharing a circuit with other heavy electrical equipment). In general, do not allow the system to share a circuit with any of the following:

- Copy machines
- Air conditioners
- Vacuum cleaners
- Space heaters
- Power tools
- Teletype machines
- Laser printers
- Facsimile machines
- Any other motorized equipment

Besides these appliances, the greatest threats to a system's power supply are surges or blackouts that are caused by electrical storms. Whenever possible, turn off the system and peripherals, if any, and unplug them from their power sources during thunderstorms. If a blackout occurs—even a temporary one—while the system is turned on, turn off the system immediately and disconnect it from the electrical outlet. Leaving the system on

may cause problems when the power is restored; all other appliances left on in the area may create large voltage spikes that may damage the system.

System Grounding

Warning When installing or replacing the unit, the ground connection must always be made first and disconnected last. **Statement 1046**

Caution Installations that rely solely on system grounding that uses only an AC third-prong ground run a substantially greater risk of equipment problems and data corruption than those installations that use both the AC third-prong ground and a properly installed system ground.

The following table lists some general grounding practice guidelines.

Table 3: Grounding Practice Guidelines

Environment	Electromagnetic Noise Severity Level	Grounding Recommendations
Commercial building is subjected to direct lightning strikes. For example, some places in the United States, such as Florida, are prone to more lightning strikes than other areas.	High	All lightning protection devices must be installed in strict accordance with manufacturer recommendations. Conductors carrying lightning current should be spaced away from power and data lines in accordance with applicable recommendations and codes. Best grounding practices must be closely followed.
Commercial building is located in an area where lightning storms occur frequently, but is not prone to direct lightning strikes.	High	Best grounding practices must be closely followed.
Commercial building contains a mix of information technology equipment and industrial equipment, such as welding.	Medium to High	Best grounding practices must be closely followed.
Existing commercial building is not subject to natural environmental noise or man-made industrial noise. This building contains a standard office environment. This installation has a history of malfunction due to electromagnetic noise.	Medium	Best grounding practices must be closely followed. Determine source and cause of noise if possible, and mitigate as closely as possible at the noise source or reduce coupling from the noise source to the victim equipment.

Environment	Electromagnetic Noise Severity Level	Grounding Recommendations
New commercial building is not subject to natural environmental noise or man-made industrial noise. This building contains a standard office environment.	Low	Best grounding practices should be followed as closely as possible. Electromagnetic noise problems are not anticipated, but installing a best-practice grounding system in a new building is often the least expensive route, and the best way to plan for the future.
Existing commercial building is not subject to natural environmental noise or man-made industrial noise. This building contains a standard office environment.	Low	Best grounding practices should be followed as much as possible. Electromagnetic noise problems are not anticipated, but installing a best-practice grounding system is always recommended.

Note Grounding lugs must be installed on the location marked on the chassis only.

Maintaining Safety with Electricity

When working on electrical equipment, follow these guidelines:

- Do not work alone if potentially hazardous conditions exist anywhere in your work space.
- Never assume that power is disconnected from a circuit; always check the circuit before working on it.
- Look carefully for possible hazards in your work area, such as damp floors, ungrounded power extension cables, frayed or damaged power cords, and missing safety grounds.
- If an electrical accident occurs, proceed as follows:
  - Use extreme caution; do not become a victim yourself.
  - Disconnect power from the system.
  - Seek medical attention, if necessary.
- Use the product within its marked electrical ratings and product usage instructions.
- Install the product in compliance with local and national electrical codes.
- If any of the following conditions occur, contact the Cisco Technical Assistance Center:
  - The power cable or plug is damaged.
  - An object has fallen into the product.
  - The product has been exposed to water or other liquids.
  - The product has been dropped or shows signs of damage.
  - The product does not operate correctly when you follow the operating instructions.

- Use the correct external power source. Operate the product only from the type of power source indicated on the electrical ratings label. If you are not sure of the type of power source required, consult a local electrician.
- To help prevent electrical shock, plug all the power cables into properly grounded electrical outlets. These power cables are equipped with three-prong plugs to ensure proper grounding. Do not use adapter plugs or remove the grounding prong from a power cable.
- Observe power strip ratings. Make sure that the total current rating of all products that are plugged into the power strip does not exceed 80 percent of the power strip rating.
- Do not modify power cables or plugs yourself. Consult with a licensed electrician or your power company for site modifications. Always follow your local and national wiring codes.

Verifying Switch Operation

Before you install the switch in a rack or on a table or shelf, power on the switch and verify that it passes POST.

To power on the switch, plug one end of the AC power cord into the switch AC power connector, and plug the other end into an AC power outlet.

As the switch powers on, it begins the POST, a series of tests that runs automatically to ensure that the switch functions properly. LEDs can blink during the test. POST lasts approximately 1 minute. The SYST LED blinks green, and the other LEDs remain solid green.

When the switch completes POST successfully, the SYST LED remains green. The LEDs turn off and then reflect the switch operating status. If a switch fails POST, the SYST LED turns amber.

POST failures are usually fatal. Call Cisco technical support representative if your switch fails POST.

After a successful POST, unplug the power cord from the switch and install the switch in a rack, on a table, or on a shelf.

CHAPTER 3

Installing a Compact Switch

- Shipping Box Contents, on page 21
- Mounting the Switch, on page 23
- Connecting the System Ground, on page 37
- Attaching the Adapter Bracket to the Switch (Optional), on page 38
- Installing the Power Cord Retainer (Optional), on page 41
- Installing the Cable Guard (Optional), on page 43
- Installing an SFP or SFP+ Module, on page 45
- 10/100/1000 PoE and PoE+Port Connections, on page 46
- 10/100/1000 Ethernet Port Connections, on page 47

Shipping Box Contents

The shipping box contains the model of the switch you ordered and other components needed for installation. Some components are optional, depending on your order.

Note Verify that you have received these items. If any item is missing or damaged, contact your Cisco representative or reseller for instructions. Verify that you have received these items. If any item is missing or damaged, contact your Cisco representative or reseller for instructions.

Figure 4: Components delivered in the shipping box

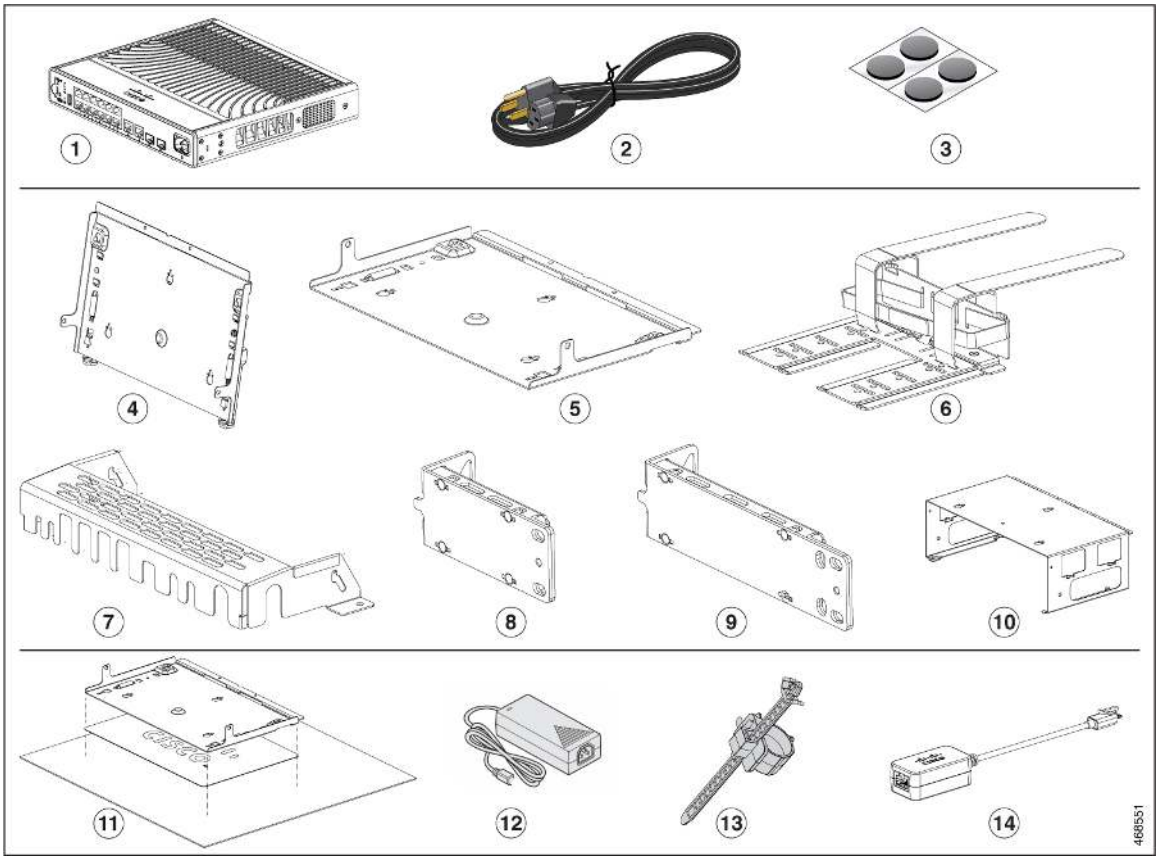

1	Cisco Catalyst 9200CX Series switch	8	(Optional) Two 19-inch mounting brackets (RACKMNT-19-CMPCT)*
2	(Optional) AC power cord* [1]	9	(Optional) Two 23-inch mounting brackets (RCKMNT-23-CMPCT)*
3	Four rubber mounting feet	10	(Optional) Desk mount (C9K-CMPCT-DESK-MNT)*
4	(Optional) DIN rail mount (C9K-CMPCT-DIN-MNT)*	11	(Optional) Magnet and mounting tray (C9K-MGNT-TRAY)*
5	(Optional) Wall mount tray (C9K-WALL-TRAY)*	12	(Optional) Auxiliary Power Adapter (C9K-ADPT-DC)*
6	(Optional) Power adapter bracket (C9K-ADPT-BRKT-12T)*	13	(Optional) Power cord retainer (C9K-CMPCT-PWR-CLP)*
7	(Optional) Cable guide (C9K-CMPCT-CBLE-GRD)*	14	(Optional) USB Type B to RJ45 adapter (CAB-CON-USB)*

[1] Available to order with C9200CX-8P-2X2G and C9200CX-12P-2X2G switches. For C9200CX-12T-2X2G, power cord is available with C9K-ADPT-DC, if ordered.

1. Item is orderable.

Mounting the Switch

The following table explains the different mounting options supported by C9200CX compact switches.

Table 4: Mounting Options

Mounting Method	Accessories Used
Wall mount	• Mounting using the Mounting Tray and Screws • Mounting using the Mounting Tray and Magnet
Rack mount	• Mounting the Switch Using Rack Mount Brackets
Shelf or top/bottom of a desk mount	• Mounting Under a Desk or a Shelf • Mounting using the Mounting Tray and Magnet
Din rail mount	• Mounting the Switch on a DIN Rail

Mounting on a Desk or Shelf Without Mounting Screws

Procedure

Step 1 Locate the adhesive strip with the rubber feet in the accessory kit.

Step 2 Remove the four rubber feet from the adhesive strip, and attach them to the locations indicated at the bottom of the unit. This prevents the switch from sliding on the desk or shelf.

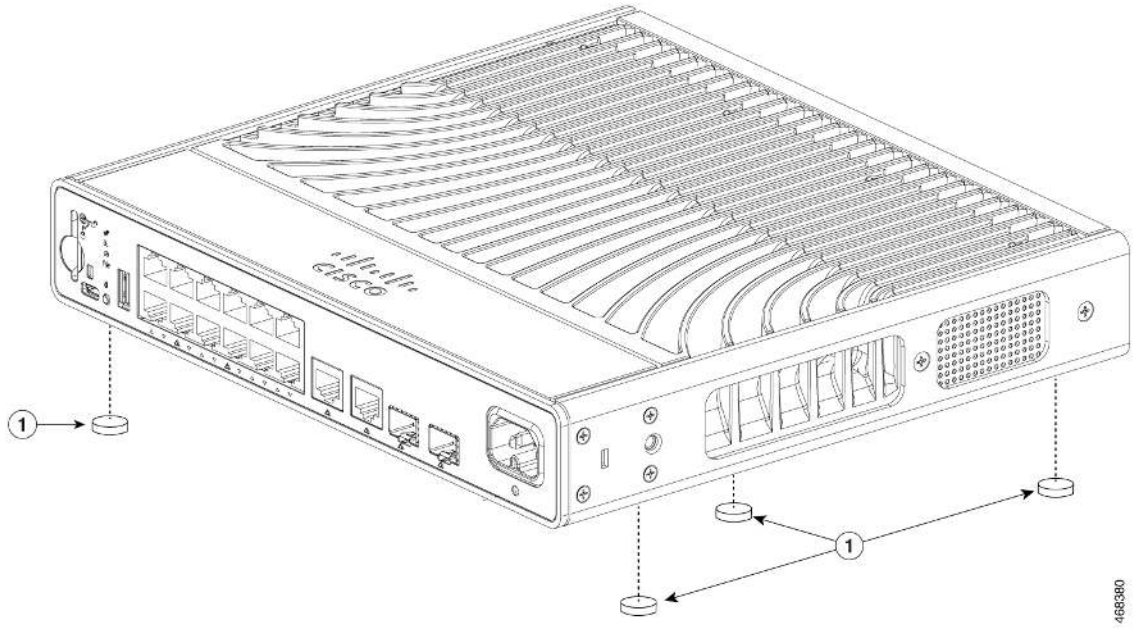

Note We strongly recommend that you attach the rubber feet to the specified location and place the side of the switch with Cisco logo facing upwards. Doing so helps prevent airflow restriction and overheating.

Warning To prevent airflow restriction, allow clearance around the ventilation openings to be at least 3 inches (7.6 cm). **Statement 1076**

Step 3 Place the switch on the desk or the shelf.

Mounting using the Mounting Tray and Screws

You can use the mounting tray to secure the switch on to a desk or a wall. The illustrations in this procedure shows how to mount the switch on a desk. You can follow similar procedure to mount the switch on a wall.

Caution Do not wall-mount the switch with its front panel facing up. Following safety regulations, wall-mount the switch with its front panel facing down or to the side, to allow sufficient airflow and to provide easier access to the cables.

Note To avoid thermal issues, do no use this mounting method for under-table scenarios.

Before you begin

Ensure you have the following items before starting the procedure.

- Mounting tray (C9K-WALL-TRAY)

- Three 8-18 Phillips pan-head screws
- Two 10-32 Phillips pan-head screws
- Screwdriver

Procedure

Step 1 Place the mounting tray on to the mounting surface.

Step 2 Use a 0.144-in. (3.7 mm) or a #27 drill bit to drill holes three 1/2-inches (12.7 mm) deep in the desk.

Step 3 Insert the three 8-18 Phillips pan-head screws in to the slots on the mounting tray, and tighten them.

Figure 5: Attaching the Mounting Tray to the Desk or Shelf

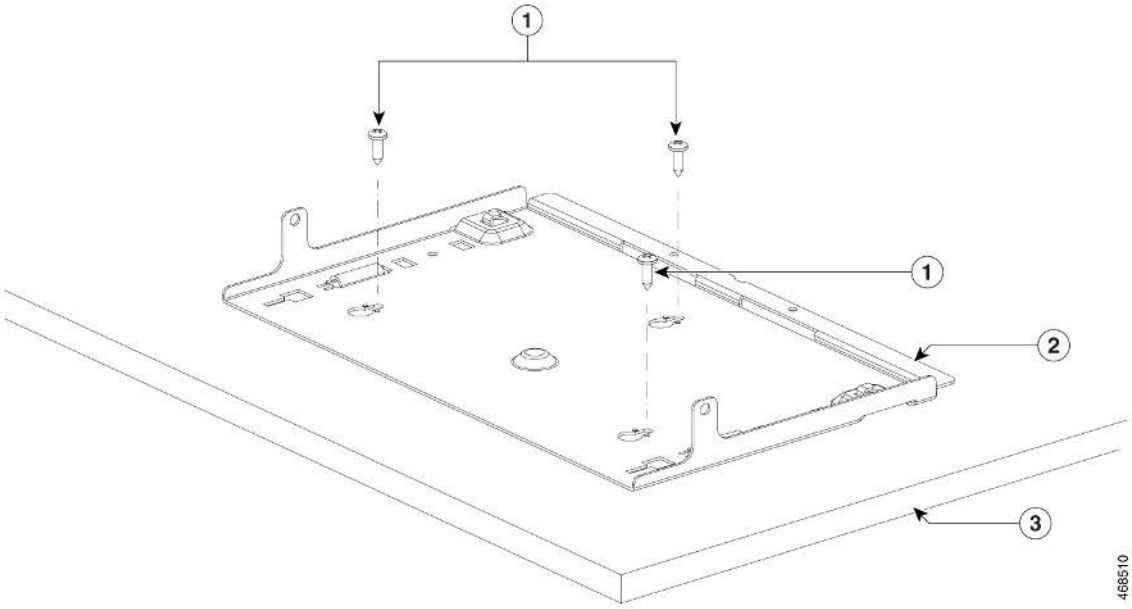

1	Three 8-18 Phillips pan-head screws	3	Desk
2	Mounting tray	-	-

Step 4 Place the switch on the mounting tray, slide it slightly forward so that the mounting tray hooks on both the sides engage with the switch.

Figure 6: Aligning the Mounting Tray Hooks with the Switch

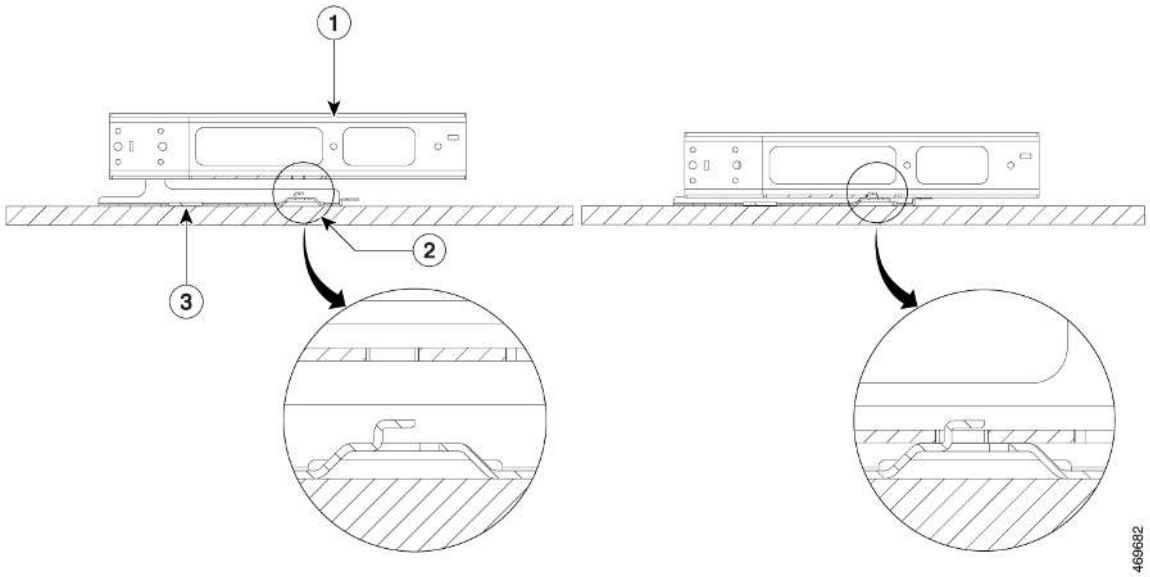

1	Switch	3	Mounting tray
2	Mounting tray hook	-	-

Warning To prevent airflow restriction, allow clearance around the ventilation openings to be at least: 3 in. (7.6 cm) **Statement 1076**

Step 5 Secure the switch to the mounting tray using the screws provided.

Figure 7: Securing the Switch to the Mounting Tray

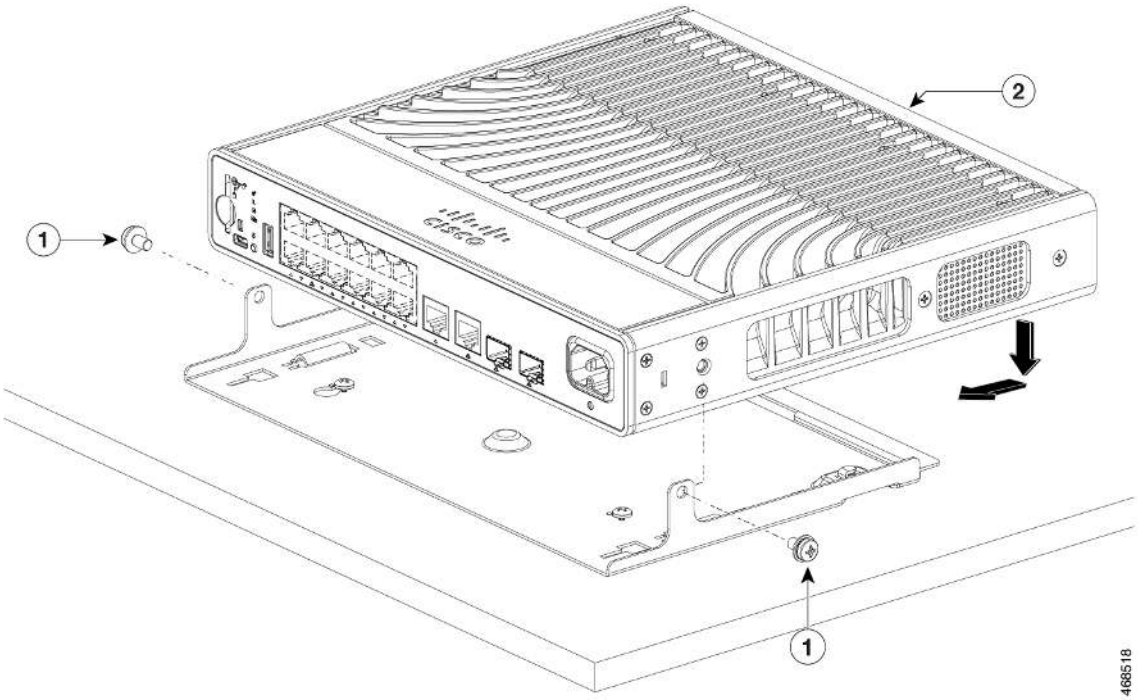

1	Two 10-32 Phillips pan-head screws	2	Switch

Warning To prevent airflow restriction, allow clearance around the ventilation openings to be at least: 3 in. (7.6 cm) **Statement 1076**

Mounting using the Mounting Tray and Magnet

This topic expains the steps to use a magnet with the mounting tray to mount the switch on a metal surface. The illustrations used in the procedure shows how to mount the switch on a metal desk. You can use a similar procedure to mount the switch on a metal wall or under a metal desk.

Caution Do not use the magnet without a mounting tray.

Before you begin

Ensure you have the following accessories available.

- Mounting tray and magnet for compact switches (C9K-MGNT-TRAY)
- Two 10-32 Phillips pan-head screws

- Phillips screwdriver

Procedure

Step 1 Place one side of the magnet against the bottom of the mounting tray.

Figure 8: Placing the Mounting Tray on the Magnet

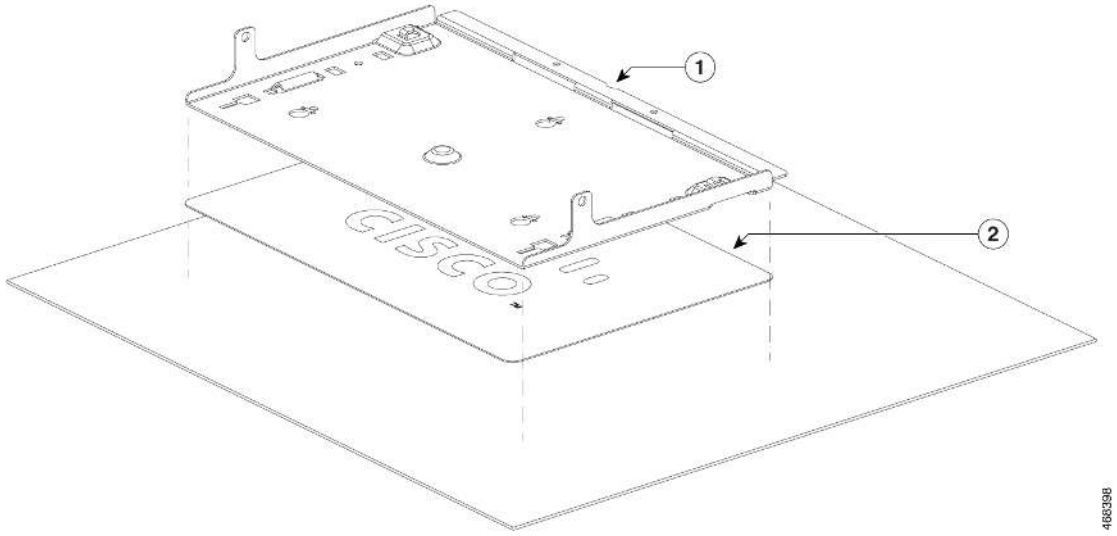

1	Mounting tray	2	Magnet

Step 2 Place the switch on the mounting tray and secure it using the two 10-32 Phillips pan-head screws.

Figure 9: Securing the Switch to the Mounting Tray

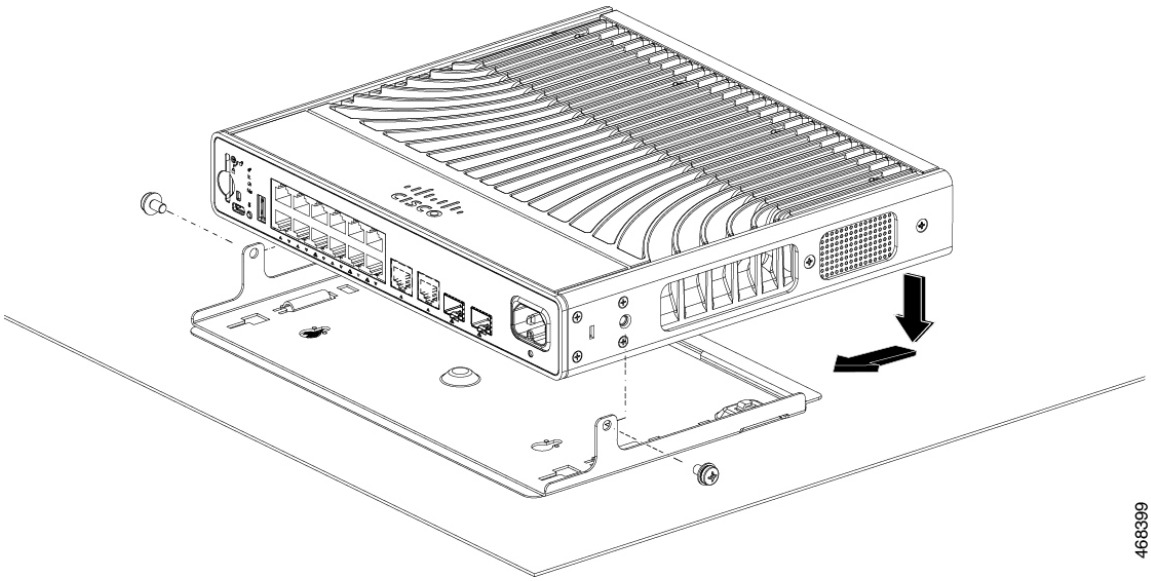

1	Two 10-32 Phillips pan-head screws	-	-

Step 3 Slide the switch slightly forward after placing on to the mounting tray so that the mounting tray hooks engage with the switch.

Figure 10: Aligning the Mounting Tray Hooks with the Switch

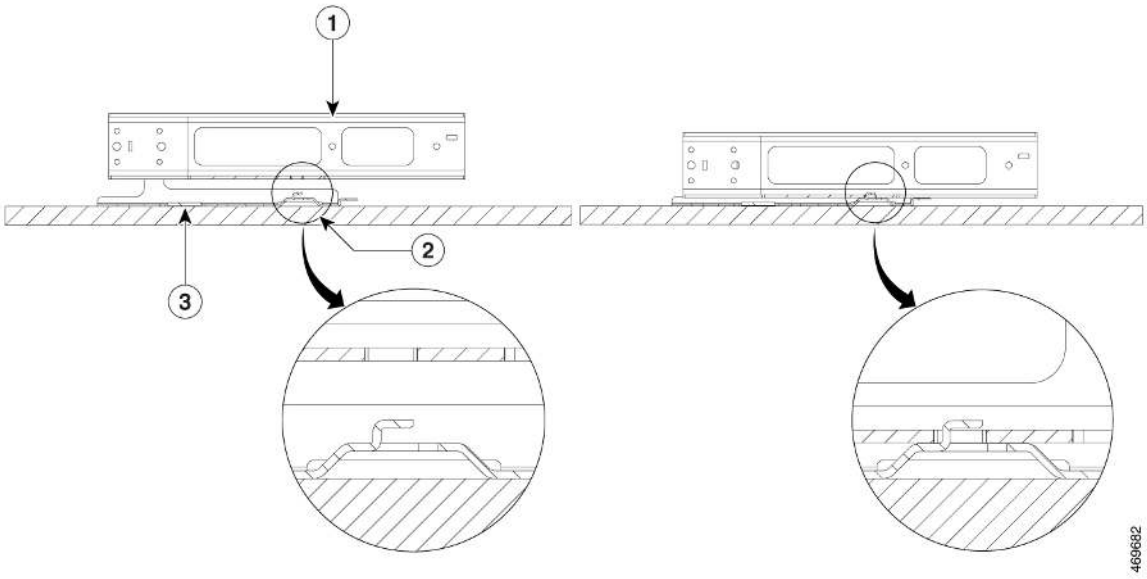

1	Switch	3	Mounting tray
2	Mounting tray hook	-	-

Step 4 Mount the magnet and the switch on a metal surface.

Warning Read the wall-mounting instructions carefully before beginning installation. Failure to use the correct hardware or to follow the correct procedures could result in a hazardous situation to people and damage to the system. **Statement 378**

Caution Do not wall-mount the switch with its front panel facing up. Following safety regulations, wall-mount the switch with its front panel facing down or to the side, to allow sufficient airflow and to provide easier access to the cables.

Warning To prevent airflow restriction, allow clearance around the ventilation openings to be at least: 3 in. (7.6 cm) **Statement 1076**

Danger Ensure that you mount the switch in an enclosed and secure area. Pulling the cables hard or an occurance of a seismic event can cause the magnet to dislodge from the mounting surface and cause bodily harm.

Mounting Under a Desk or a Shelf

Before you begin

Ensure you have the following items before starting the procedure.

- Desk mount (C9K-CMPCT-DESK-MNT)
- Three 8-18 Phillips pan-head screws
- Two 10-32 Phillips pan-head screws
- Screwdriver

Procedure

Step 1 Use the desk mount to align the screw holes and also as a guide to make sure that you install the screws under the desk or shelf with proper clearance.

Step 2 Use a 0.144-inch (3.7 mm) or a #27 drill bit to drill a hole 1/2-inches (12.7 mm) deep on the desk or shelf.

Step 3 Insert the screws in to the slots on the desk mount, and tighten them.

Figure 11: Installing the Desk Mount Under a Desk or a Shelf

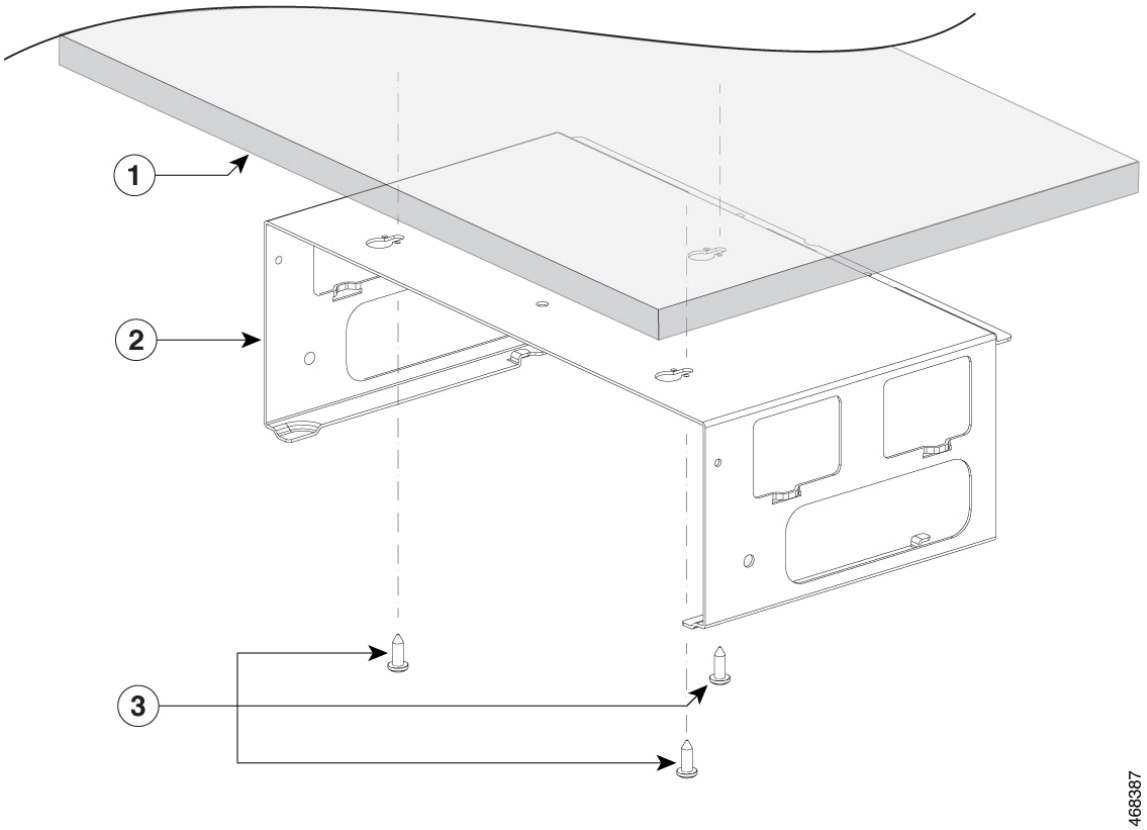

1	Desk	3	Three 8-18 Phillips pan-head screws
2	Desk mount	-	-

Step 4 Place the switch on the mounting tray, slide it slightly forward so that the mounting tray hooks on both the sides engage with the switch.

Figure 12: Aligning the Mounting Tray Hooks with the Switch

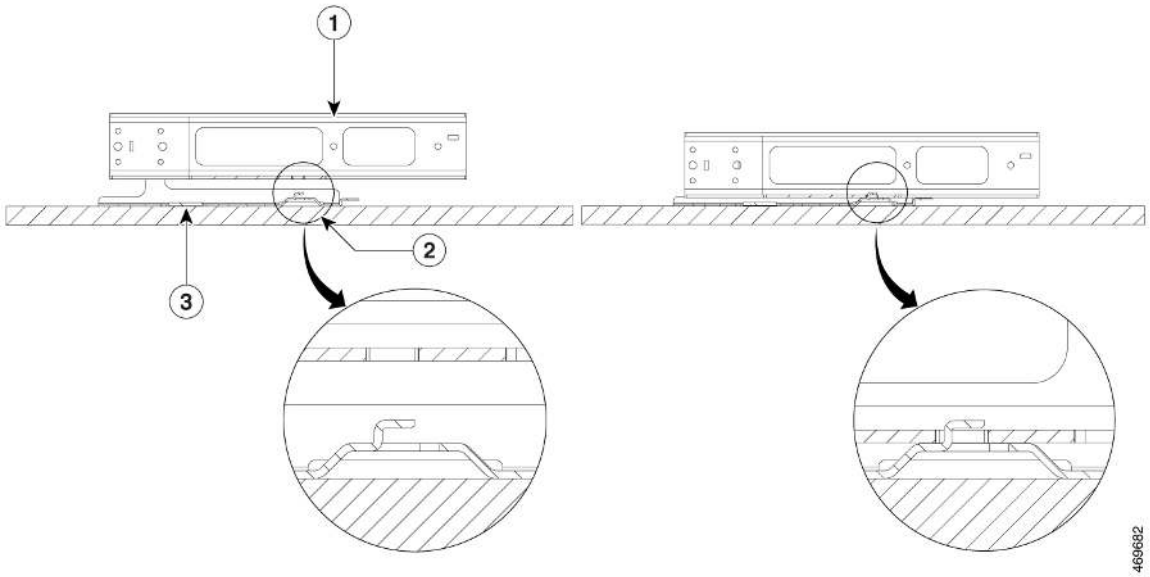

1	Switch	3	Mounting tray
2	Mounting tray hook	-	-

Warning To prevent airflow restriction, allow clearance around the ventilation openings to be at least: 3 in. (7.6 cm) **Statement 1076**

Step 5 Secure the switch to the desk mount using the three 10-32 Phillips pan-head screws provided.

Figure 13: Mounting the Switch Under a Desk or Shelf

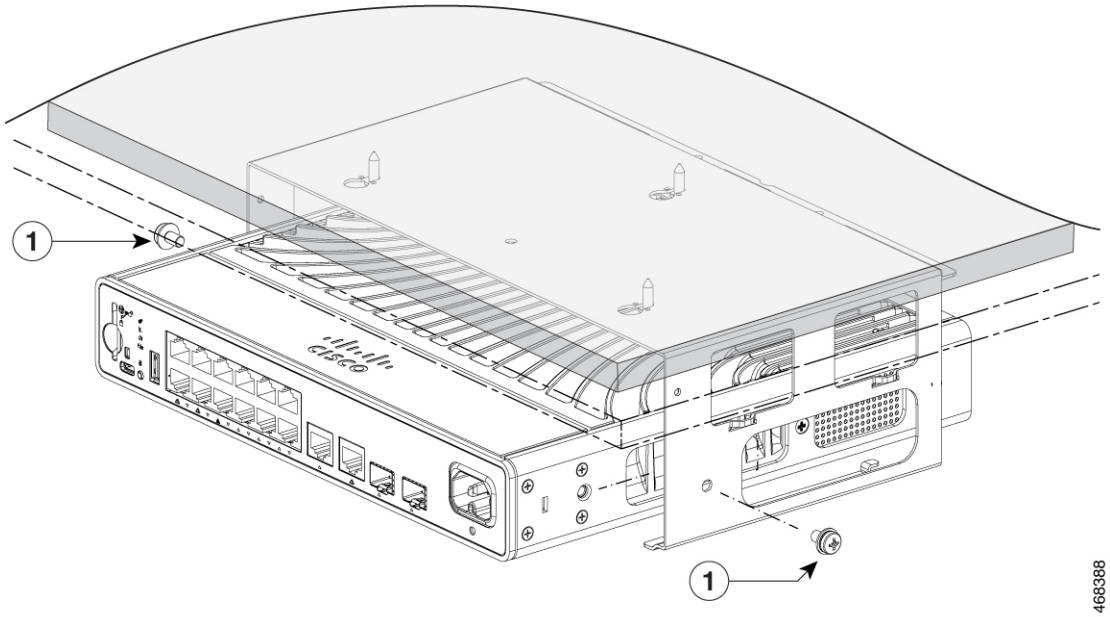

1	Two 10-32 Phillips pan-head screws	-	-

Figure 14: The Switch in Installed Position

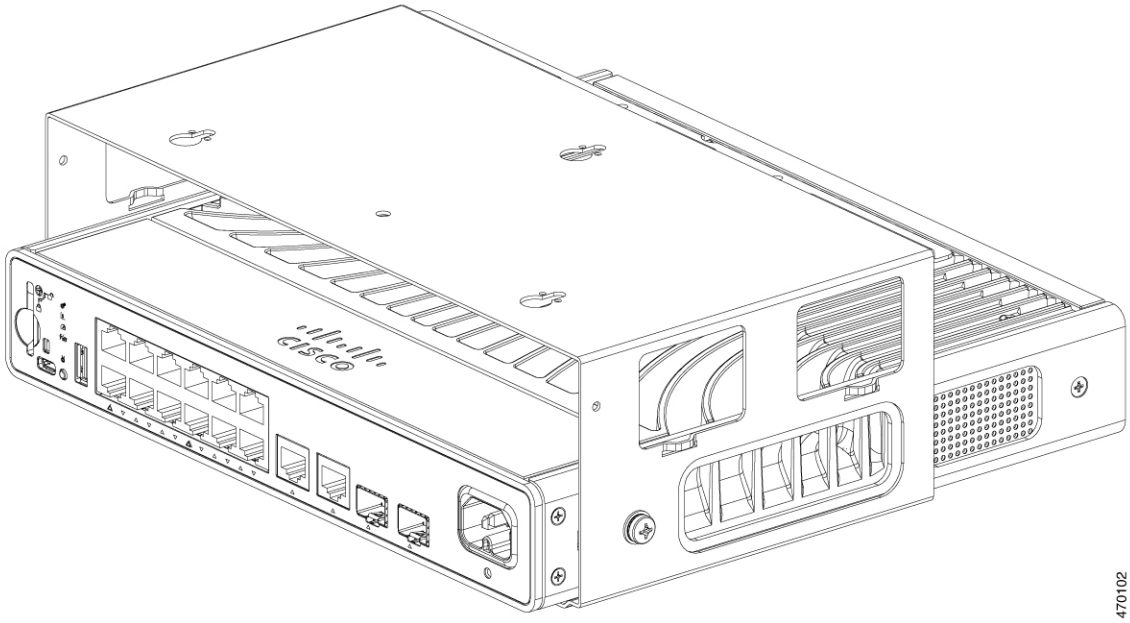

Mounting the Switch Using Rack Mount Brackets

Before you begin

Ensure you have the following:

- 19-Inch Rack Mounting Brackets (RACKMNT-19-CMPCT)
- 10-32 Phillips flat-head screws
- Number-12 or number-10 Phillips machine screws
- Phillips screwdriver

Procedure

Step 1 Secure the brackets to the switch by attaching one Phillips flat-head screws on each side of the switch.

Figure 15: Attaching Brackets for 19-inch Racks

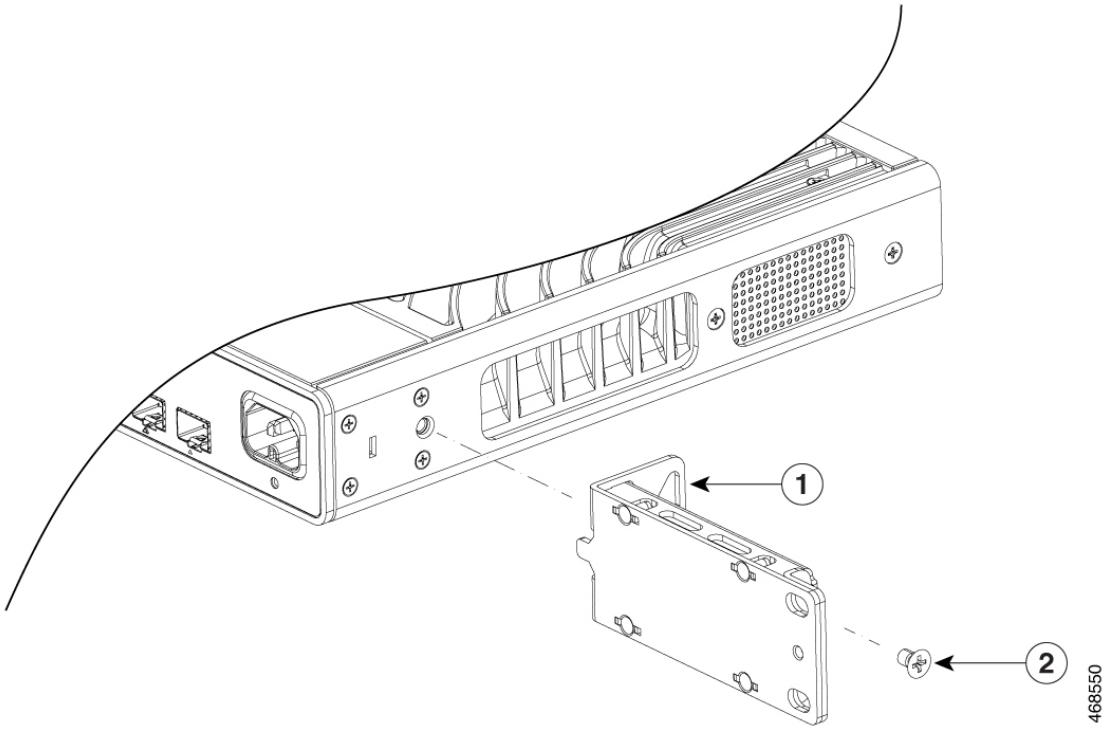

1	19-inch rack-mounting bracket	2	10-32 Phillips flat-head screws

Step 2 Secure the brackets to the rack by attaching the supplied Phillips machine screws, two screws on each sides.

Figure 16: Attaching the Brackets to the Rack

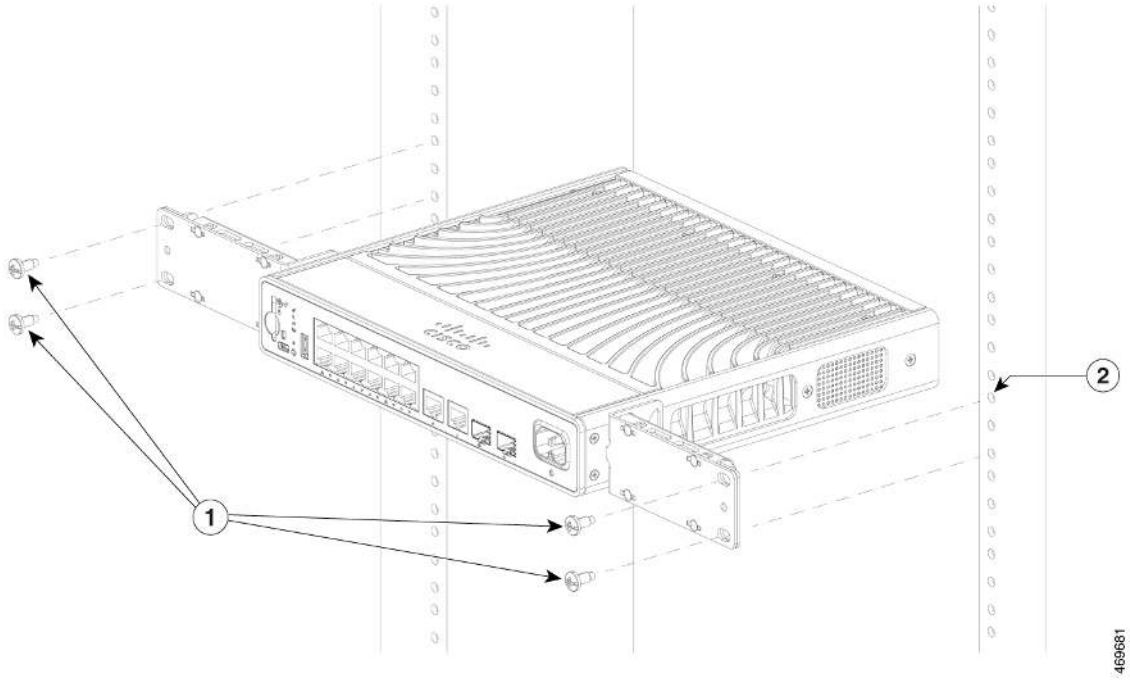

1	Number-12 or number-10 Phillips machine screws	2	Rack post

Mounting the Switch on a DIN Rail

Caution Do not install the switch with its front panel facing up. Following safety regulations, install the switch with its front panel facing down, to allow sufficient airflow and to provide easier access to the cables.

Warning To prevent airflow restriction, allow clearance around the ventilation openings to be at least: 3 in. (7.6 cm) **Statement 1076**

Before you begin

Ensure you have the following:

- DIN Rail Mount (C9K-CMPCT-DIN-MNT)
- 10-32 Phillips flat-head screws
- Phillips screwdriver

Procedure

Step 1 Place the DIN rail mount on the DIN rail, making sure that the top of the DIN rail mount clip hooks over the top of the DIN rail.

Step 2 Sliding the release tab downwards, hook the clip on to the rail and release the tab until the rail mount clip locks into place with a click.

Figure 17: Attaching the DIN Rail Mount to the DIN Rail

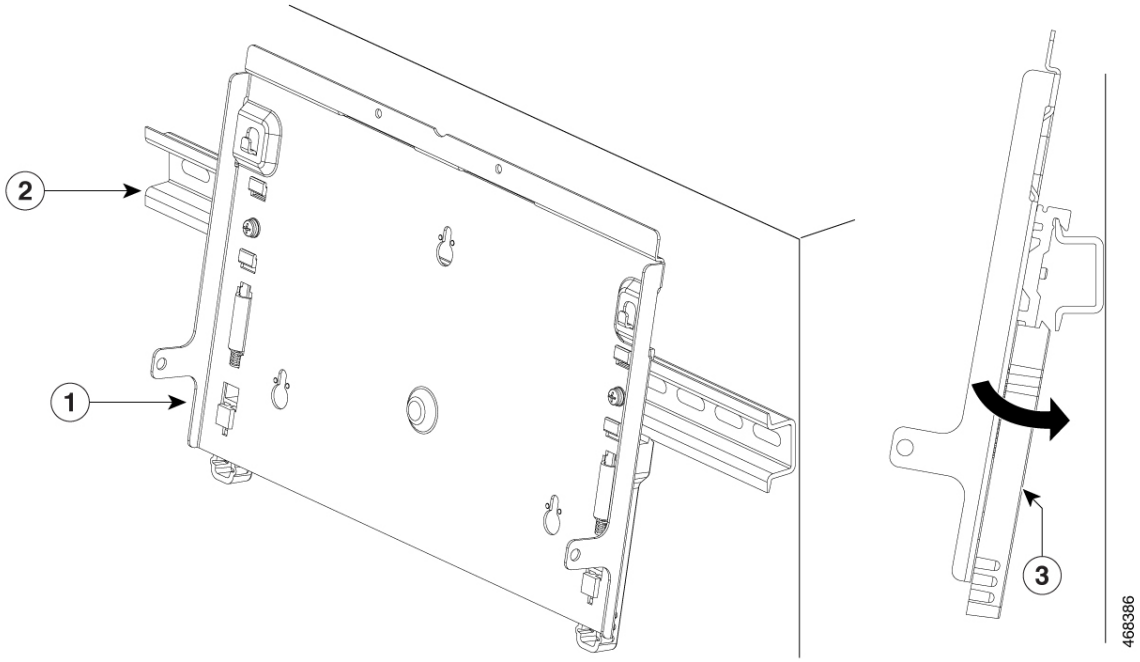

1	DIN rail mount	3	Release tab
2	DIN rail **Note** Note that the DIN rail is not part of the DIN Rail Mount kit.	-	-

Step 3 Place the switch on to the DIN rail mount and secure it using the two 10-32 Phillips pan-head screws.

Figure 18: Securing the Switch to the DIN Rail

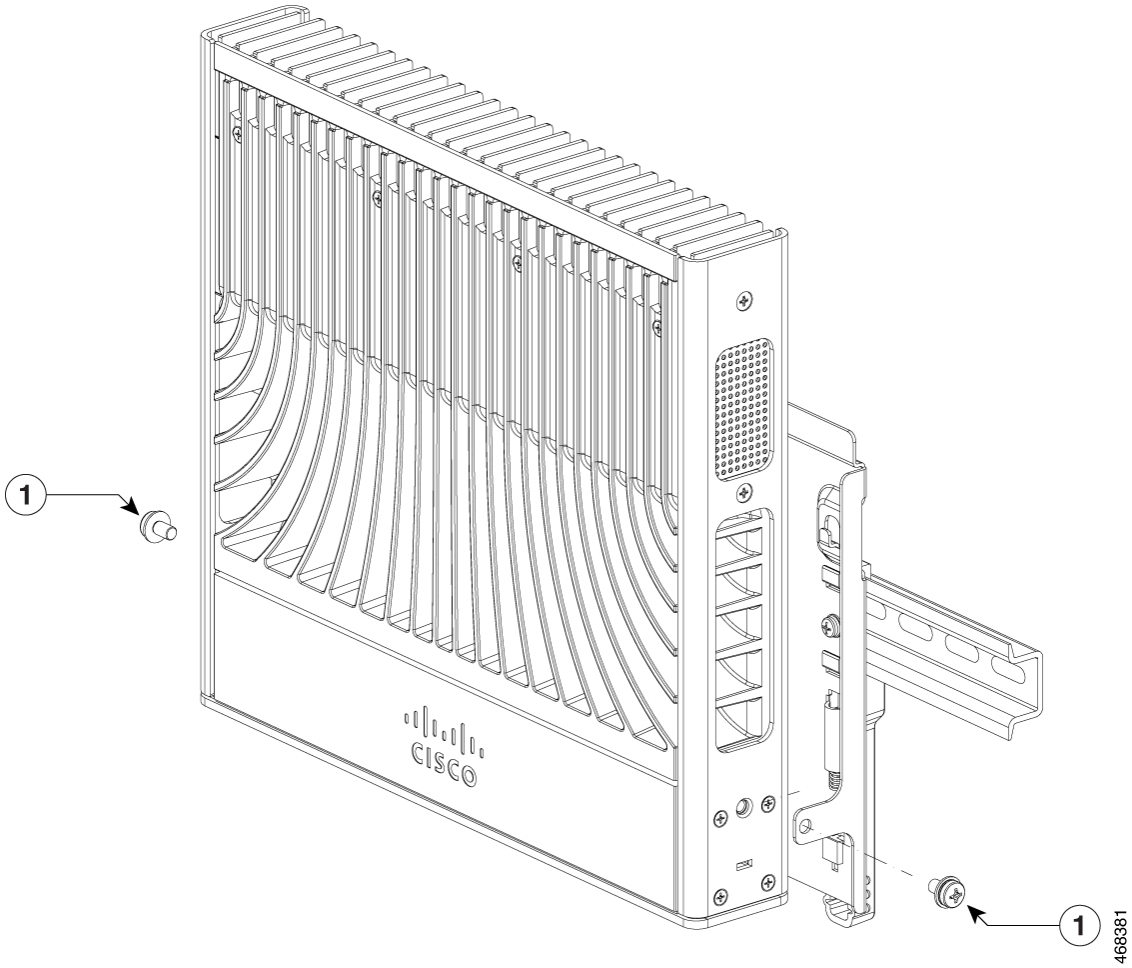

1	10-32 Phillips pan-head screws	-	-

Connecting the System Ground

To establish an earth ground for the switch, you must attach a grounding cable from the chassis' grounding lug to the rack.

Figure 19: Connecting the System Ground

Procedure

Step 1 Use a wire-stripping tool to remove approximately 0.5 inch (12.7 mm) ± 0.02 inch (0.5 mm) of the covering from the end of the grounding wire.

Step 2 Insert the stripped end of the grounding wire into the open end of the grounding lug.

Step 3 Crimp the grounding wire in the barrel of the grounding lug. Verify that the ground wire is securely attached to the ground lug.

Step 4 Place the grounding wire lug against the grounding pad, making sure that there is solid metal-to-metal contact.

Step 5 Secure the grounding lug to the switch with the grounding screw. Ensure that the grounding lug and the grounding wire do not interfere with other switch hardware or rack equipment.

Figure 20: Attaching the Grounding Lug

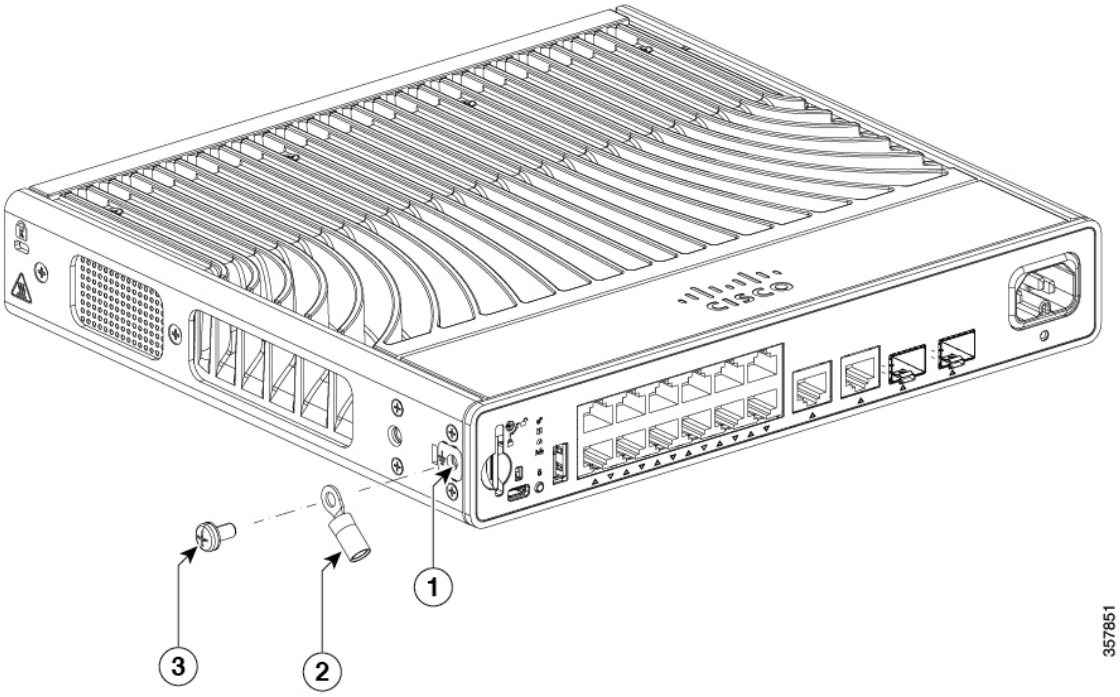

1	Location of the system ground lug	3	3/8" length 10-32 screw
2	Grounding lug	-	-

Step 6 Connect the other end of the grounding wire to an appropriate grounding point at your site or to the rack.

Attaching the Adapter Bracket to the Switch (Optional)

If you are using an auxiliary power adapter to power the switch which is placed on a mounting tray or a DIN rail mount, you can use the optional power adapter bracket to secure the power adapter. You can order the power adapter bracket (C9K-ADPT-BRKT-12T) from your Cisco representative.

Before you begin

- Power adapter

- Power adapter bracket (C9K-ADPT-BRKT-12T)
- One 8-18 Phillips pan-head screws
- Two M3x6mm pan head screw
- Phillips screwdriver

Procedure

Step 1 Attach the power adapter bracket to the rear side of the mounting tray or the DIN rail mount using the two M3 x 6 mm Phillips pan head screws provided.

Figure 21: Attaching the Power Adapter Bracket

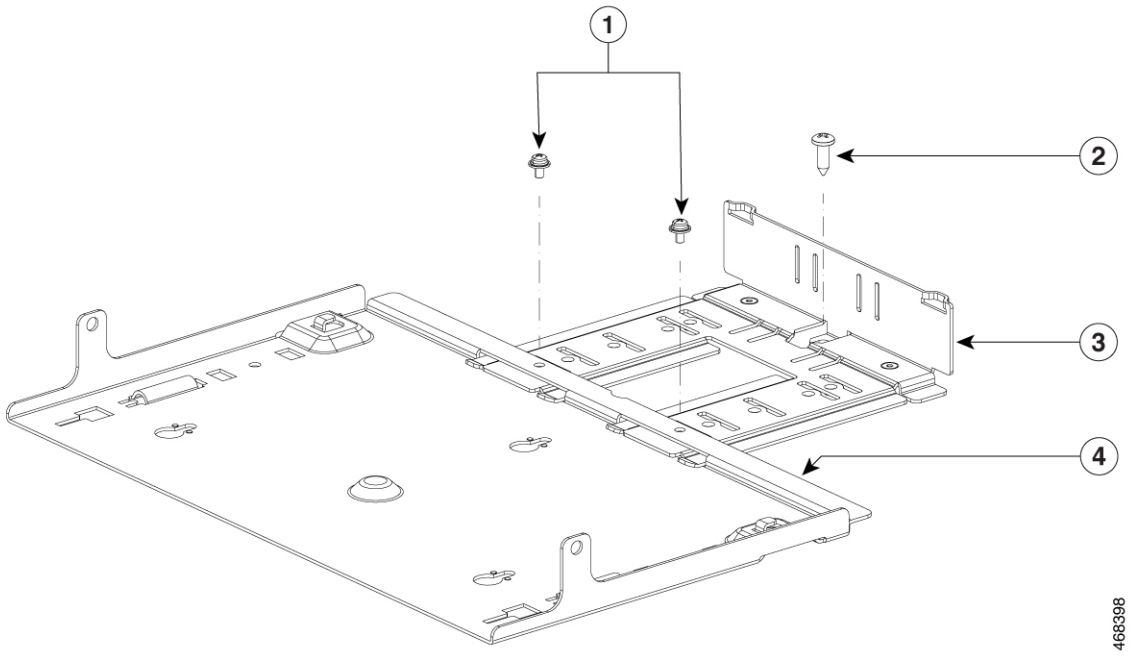

1	M3 x 6 mm Phillips pan head screws	3	Adapter bracket
2	8-18 x 0.5" Phillips pan head tapping screw	4	Mounting tray

Note The power adapter bracket cannot be used without a mounting tray or a DIN rail mount.

Step 2 Thread the velcro straps through the slots on the adapter bracket that corresponds to the size of the adapter. You can thread the strap based on the size of the power adapter. The following illustration displays some examples.

Figure 22: Threading the Velcro Strap through the Adapter Bracket

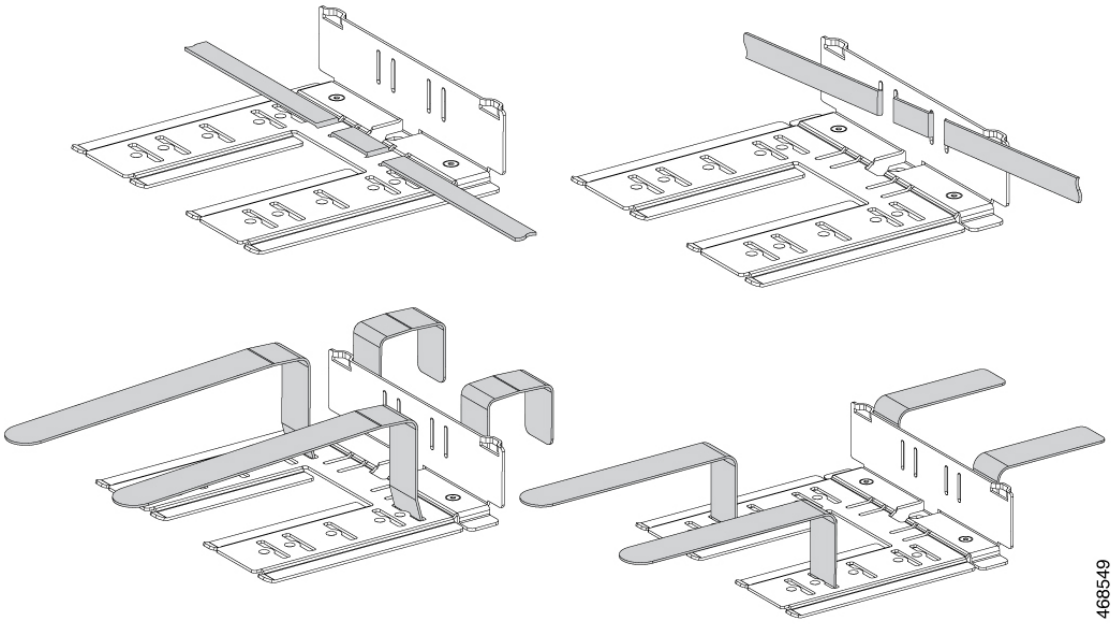

Step 3 Place the adapter into the power adapter bracket and secure it using the velcro straps provided.

Figure 23: Securing the Power Adapter to the Adapter Bracket

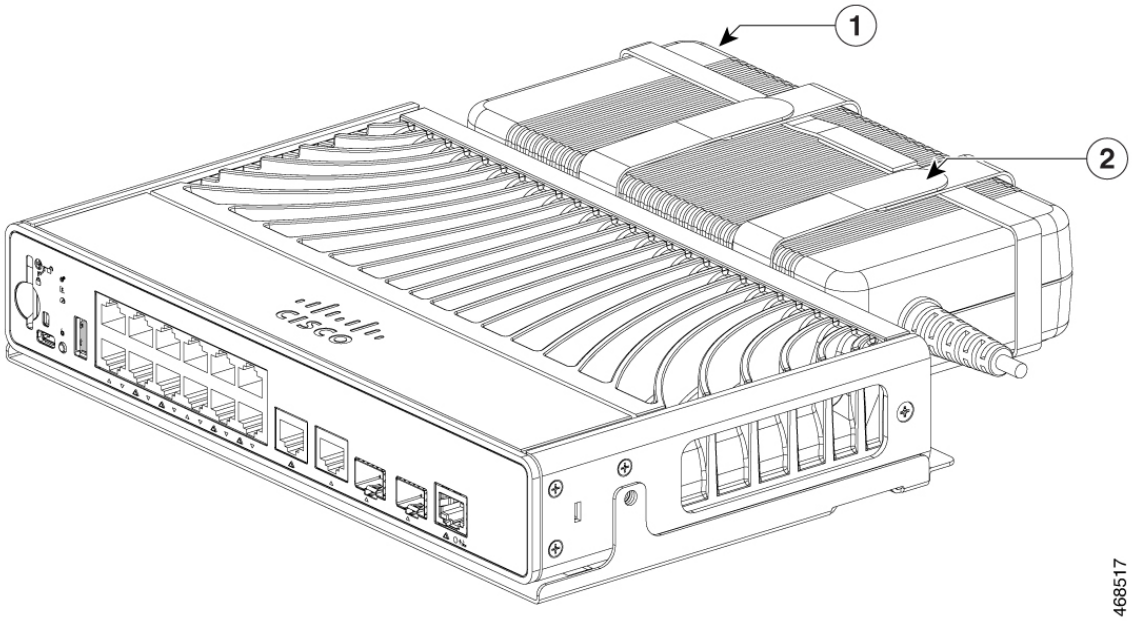

1	Power adapter	2	Velcro strap

Installing the Power Cord Retainer (Optional)

Note This section applies to switches with an AC power connector.

Before you begin

- The power cord retainer (C9K-CMPCT-PWR-CLP) is optional. You can order it when you order your switch, or you can order it later from your Cisco representative.

Procedure

Step 1 Fix the power cord retainer strap to the switch using the M3 pan-head screw provided.

Figure 24: Attaching the Power Cord Retainer Strap

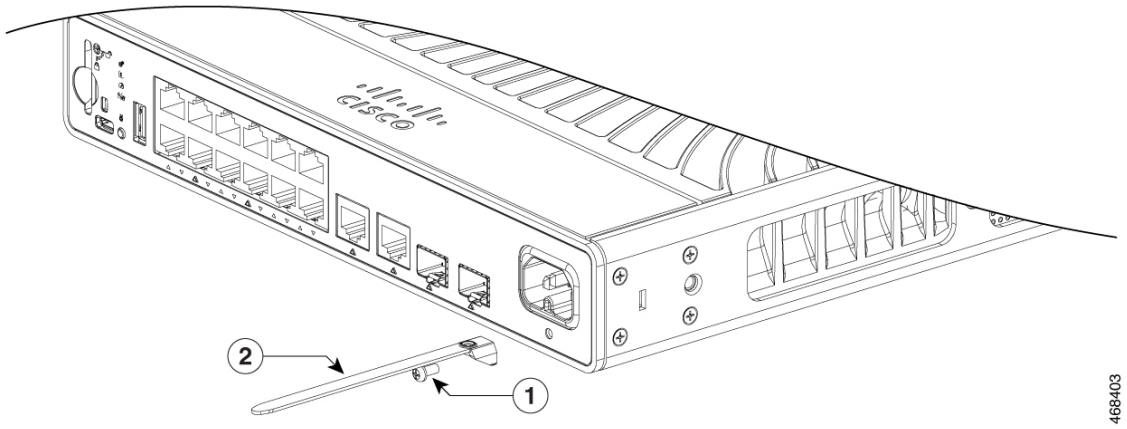

1	M3x6mm pan-head screw	2	Power cord retainer strap

Step 2 Slide the retainer clamp around the AC power cord and position it closest to the connector on the adapter.

Note Depending on the width of the power cord, adjust the size of the retainer clamp, if required.

Figure 25: Sliding the Retainer Clamp Through the Power Cord

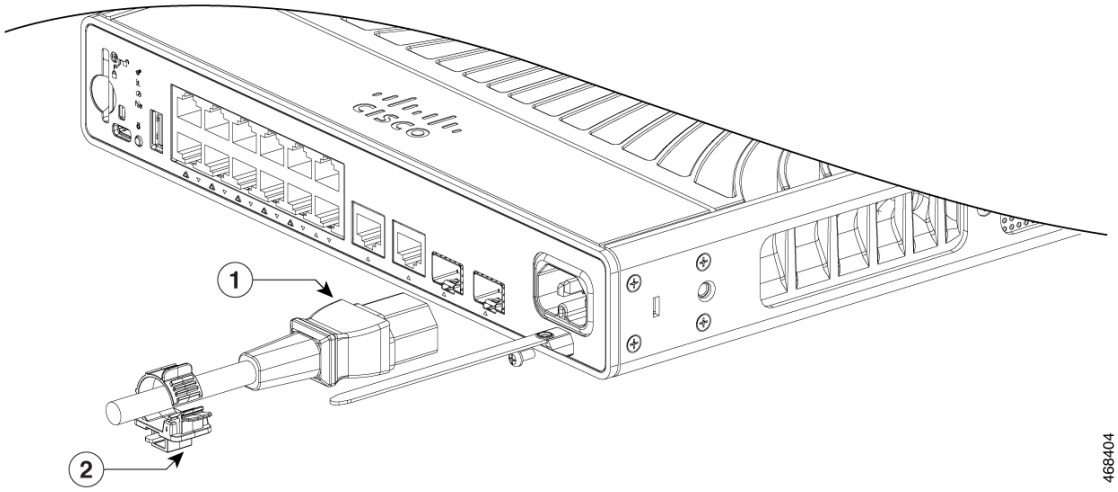

1	AC power cord connector	2	Power cord retainer clamp

Step 3 Insert the retainer strap through the latch at the bottom of the clamp and press the tabs on the retainer clamp towards each other to secure the power cord.

Figure 26: Locking the Retainer Clamp

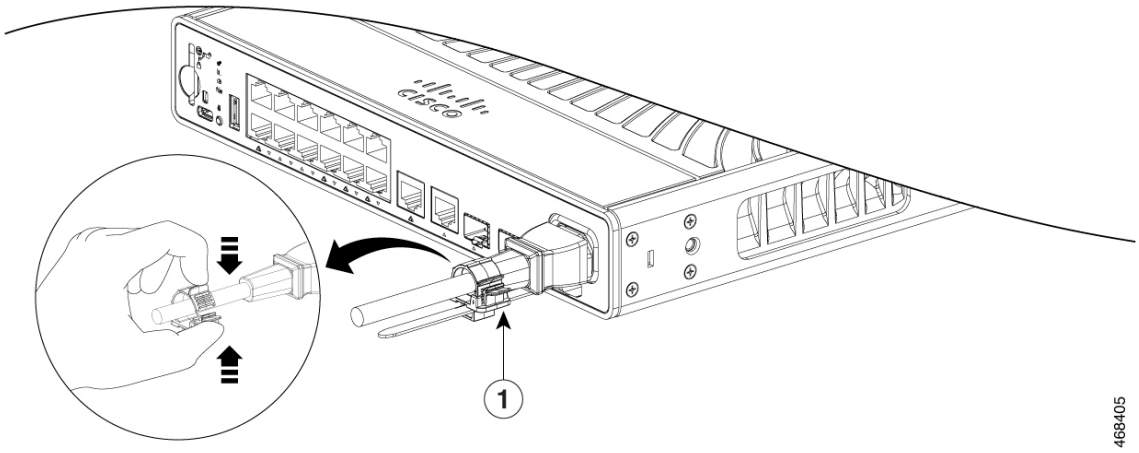

1	Pressing the tabs on the retainer clamp	-	-

Installing the Cable Guard (Optional)

The cable guard prevents tampering with the cables after they are installed. The cable guard (C9K-CMPCT-CBLE-GRD=) is not included with the switch, but you can order it from your Cisco representative.

Note You can use the cable guard when the switch is mounted on a wall.

The cable guard is shipped with the following items:

- Two 10-32 Phillips pan-head screws
- Two 8-18 Phillips pan-head screws

Procedure

Step 1 Use the supplied 10-32 pan-head screws to attach the cable guard to the switch.

Figure 27: Attaching the Cable Guard to the Switch

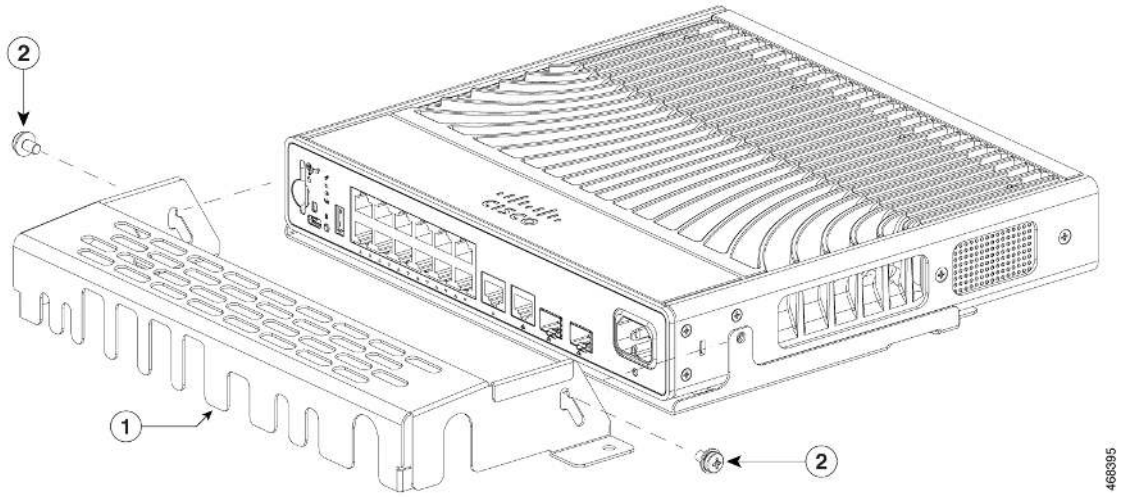

1	Cable Guard	2	Two 10-32 pan-head screws

Step 2 Pivot the cable guide upwards and install the cables.

Figure 28: Pivoting the Cable Guard Upwards

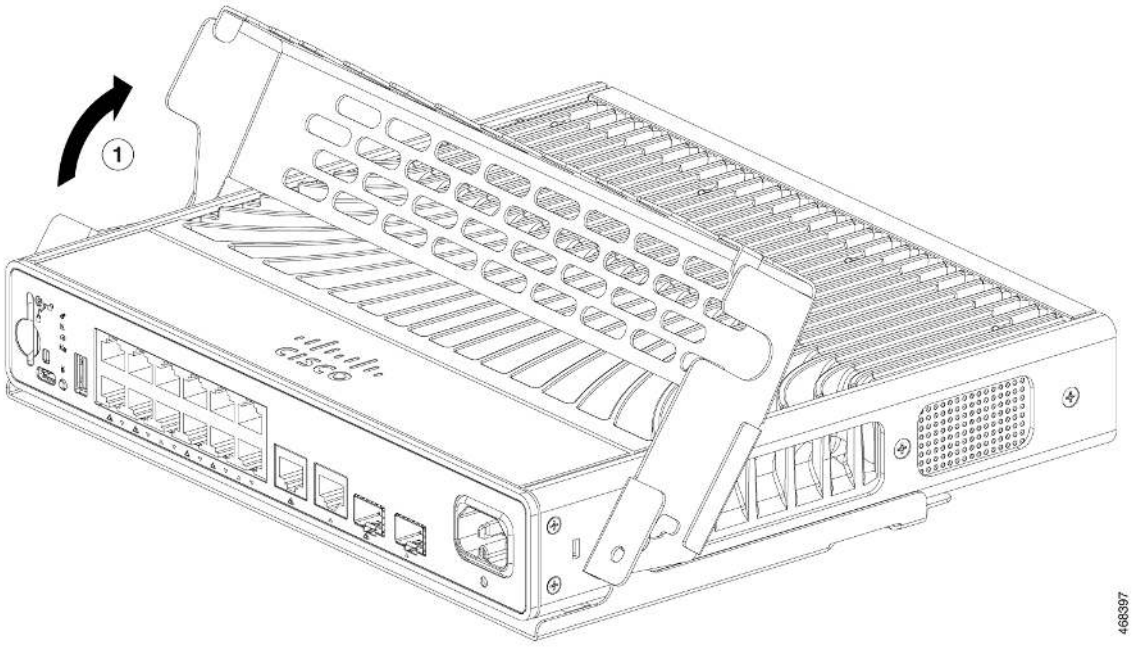

1	Cable guard	2	Pivot direction for cable guard

Step 3 Guide the connected cables through the slots in the front of the cable guard and pivot the cable guide back to the original position as shown in the following figure.

Step 4 Lock the cable guide in the installed position using the two 8-18 Phillips pan-head screws provided.

Figure 29: Switch with Cable Guide Installed

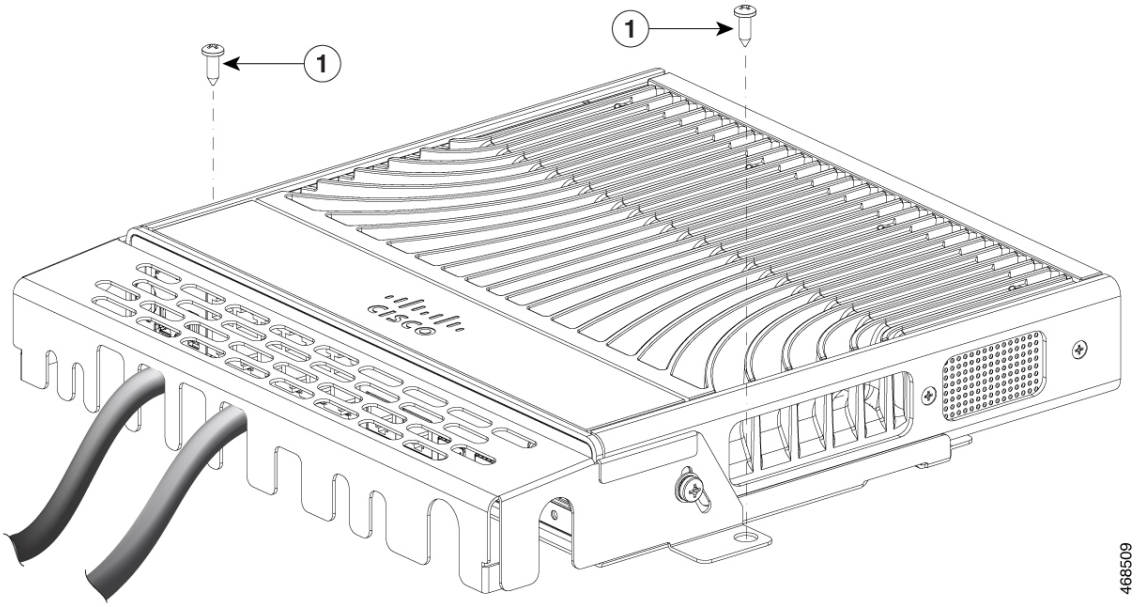

1	Two 8-18 Phillips pan-head screws	-	-

Step 5 (Optional) To attach the cable guard to the desk or wall, use a 0.144-inch (3.7 mm) or a #27 drill bit to drill holes 1/2-inches (12.7 mm) deep at each of the two mounting locations. Insert the supplied 0.5 in. (12.7 mm) number-8 Phillips wood screws and tighten them.

Installing an SFP or SFP+ Module

Before you begin

When installing SFP or SFP+ modules, observe these guidelines:

- Do not remove the dust plugs from the modules or the rubber caps from the fiber-optic cable until you are ready to connect the cable. The plugs and caps protect the module ports and cables from contamination and ambient light.
- To prevent ESD damage, follow your normal board and component handling procedures when connecting cables to the switch and other devices.

Caution Removing and installing an SFP or SFP+ module can shorten its useful life. Do not remove and insert any module more often than is absolutely necessary.

Warning Class 1 laser product. **Statement 1008**

Procedure

Step 1 Attach an ESD-preventive wrist strap to your wrist and to a bare metal surface.

Step 2 Find the send (TX) and receive (RX) markings on the module top.

On some SFP or SFP+ modules, the send and receive (TX and RX) markings might be replaced by arrows that show the direction of the connection.

Step 3 If the module has a bale-clasp latch, move it to the open, unlocked position.

Step 4 Align the module in front of the slot opening, and push until you feel the connector snap into place.

Figure 30: Installing an SFP Module

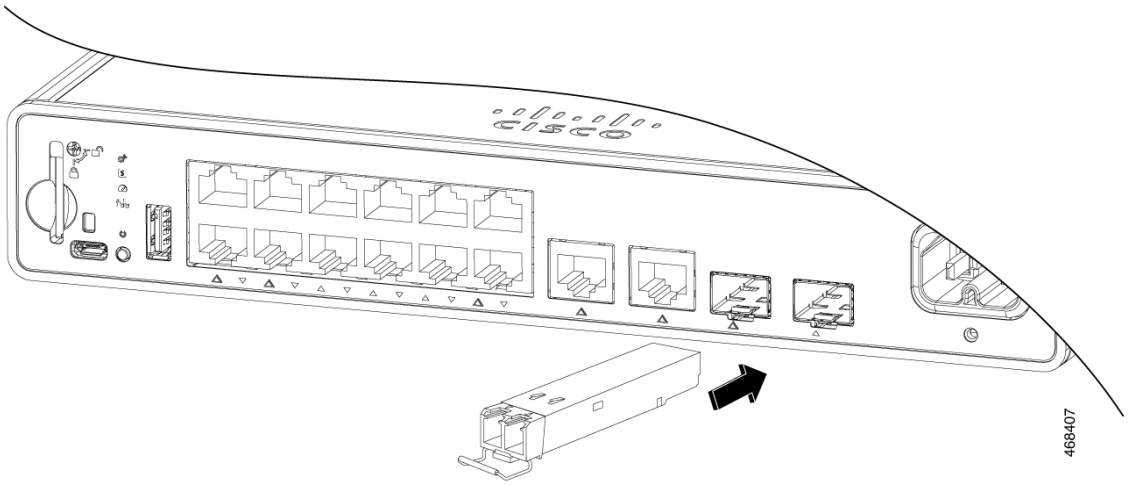

Step 5 If the module has a bale-clasp latch, close it.

Step 6 For fiber-optic SFP or SFP+ modules, remove the dust plugs and save.

Step 7 Connect the required cables.

10/100/1000 PoE and PoE+Port Connections

The ports provide PoE support for devices compliant with IEEE 802.3af and 802.3at (PoE+), and also provide Cisco prestandard PoE support for Cisco IP Phones and Cisco Aironet Access Points.

On a per-port basis, you can control whether or not a port automatically provides power when an IP phone or an access point is connected.

To access an advanced PoE planning tool, use the Cisco Power Calculator available on Cisco.com at this URL: http://tools.cisco.com/cpc/launch.jsp

You can use this application to calculate the power supply requirements for a specific PoE configuration. The results show output current, output power, and system heat dissipation.

Warning Voltages that present a shock hazard may exist on Power over Ethernet (PoE) circuits if interconnections are made using uninsulated exposed metal contacts, conductors, or terminals. Avoid using such interconnection methods, unless the exposed metal parts are located within a restricted access location and users and service people who are authorized within the restricted access location are made aware of the hazard. A restricted access area can be accessed only through the use of a special tool, lock and key or other means of security. Statement 1072

Caution Category 5e and Category 6 cables can store high levels of static electricity. Always ground the cables to a suitable and safe earth ground before connecting them to the switch or other devices.

Caution Noncompliant cabling or powered devices can cause a PoE port fault. Use only standard-compliant cabling to connect Cisco prestandard IP Phones and wireless access points, IEEE 802.3af, or 802.3at (PoE+) compliant devices. You must remove any cable or device that causes a PoE fault.

Procedure

Step 1 Connect one end of the cable to the switch PoE port.

Step 2 Connect the other end of the cable to an RJ-45 connector on the other device. The port LED turns on when both devices have established link.

The port LED is amber while STP discovers the topology and searches for loops. This process takes about 30 seconds, and then the port LED turns green. If the LED is off, the other device might not be turned on, there might be a cable problem, or there might be a problem with the adapter in the other device.

Step 3 Reconfigure and reboot the connected device, if needed.

Step 4 Repeat Steps 1 through 3 to connect each device.

Note Many legacy powered devices, including older Cisco IP phones and access points that do not fully support IEEE 802.3af, might not support PoE when connected to the switches by a crossover cable.

10/100/1000 Ethernet Port Connections

The switch 10/100/1000 port configuration changes to operate at the speed of the attached device. If the attached ports do not support autonegotiation, you can manually set the speed and duplex parameters. Connecting devices that do not autonegotiate or that have the speed and duplex parameters manually set can reduce performance or result in no linkage.

To maximize performance, choose one of these methods for configuring the Ethernet ports:

- Let the ports autonegotiate both speed and duplex.
- Set the interface speed and duplex parameters on both ends of the connection.

Auto-MDIX Connections

The autonegotiation and the auto-MDIX features are enabled by default on the switch.

With autonegotiation, the switch port configurations change to operate at the speed of the attached device. If the attached device does not support autonegotiation, you can manually set the switch interface speed and duplex parameters.

With auto-MDIX, the switch detects the required cable type for copper Ethernet connections and configures the interface accordingly.

If auto-MDIX is disabled, use the guidelines in this table to select the correct cable.

Table 5: Recommended Ethernet Cables (When Auto-MDIX is Disabled)

Device	Crossover Cable	Straight-Through Cable
Switch to switch	Yes	No
Switch to hub	Yes	No
Switch to computer or server	No	Yes
Switch to router	No	Yes
Switch to IP phone	No	Yes

[2] 100BASE-TX and 1000BASE-T traffic requires twisted four-pair, Category 5 or higher. 10BASE-T traffic can use Category 3 cable or higher.

CHAPTER 4

Configuring the Switch

- Configuring the Switch Using the Web User Interface, on page 49
- Configuring the Switch Using the CLI, on page 49

Configuring the Switch Using the Web User Interface

For instructions on setting up the switch using the WebUI, refer to the required version of the software configuration guide. In the guide, go to *Configuring the Switch Using the Web User Interface*.

Configuring the Switch Using the CLI

Accessing the CLI Through the Console Port

You can access the CLI on a configured or unconfigured switch by connecting the RJ-45 console port or USB console port of the switch to your PC or workstation and accessing the switch through a terminal emulation program.

Note If you have stacked your switches, connect to the console port of one of the switches in the stack. You can initially configure the entire stack from any member switch.

Connecting the RJ45 Console Port

Procedure

Step 1 Connect the RJ45 port to the serial port on the terminal server or your PC using the optional RJ45-to-DB9 adapter cable. Connect the other end of the cable to the switch console port.

Step 2 Start the terminal-emulation program on the PC or the terminal. The program, frequently a PC application such as Putty or TeraTerm, makes communication between the switch and your PC or terminal possible.

Step 3 Configure the baud rate and character format of the PC or terminal to match the console port default characteristics:

- 9600 baud
- 8 data bits
- 1 stop bit
- No parity
- None (flow control)

Step 4 Power on the switch.

Step 5 The PC or terminal displays the bootloader sequence. Press **Enter** to display the setup prompt.

Connecting the USB Console Port

Procedure

Step 1 If you are connecting the switch USB console port to a Windows-based PC for the first time, install the USB driver. See Installing the Microsoft Windows USB Device Driver, on page 50. .

Note USB Type A port on the switch provides file system support and is **NOT** a console port. See USB Type A Port section.

Step 2 Connect a USB cable to the PC USB port. Connect the other end of the cable to the switch mini-B (5-pin-connector) USB console port.

Step 3 Start the terminal-emulation program on the PC or the terminal. The program, frequently a PC application such as Putty or TeraTerm, makes communication between the switch and your PC or terminal possible.

Step 4 Configure the baud rate and character format of the PC or terminal to match the console port default characteristics:

- 9600 baud
- 8 data bits
- 1 stop bit
- No parity
- None (flow control)

Step 5 Power on the switch as described in the switch getting started guide.

Step 6 The PC or terminal displays the bootloader sequence. Press **Enter** to display the setup prompt. Follow the steps in the Setup program.

Installing the Microsoft Windows USB Device Driver

A USB device driver must be installed the first time a Microsoft Windows-based PC is connected to the USB console port on the switch.

Installing the Cisco Microsoft Windows USB Driver

Procedure

Step 1 Obtain the Cisco USB console driver file from the Cisco.com web site and unzip it.

Note You can download the driver file from the Cisco.com site for downloading the switch software.

Windows 10 includes a USB to RS232 driver. However for added functionality, download the USB Console Software from the Software Download Center for Catalyst 3850 Series Switches at cisco.com.

Step 2 If using 32-bit Windows, double-click the setup.exe file in the Windows_32 folder. If using 64-bit Windows, double-click the setup(x64).exe file in the Windows_64 folder.

Step 3 The Cisco Virtual Com InstallShield Wizard begins. Click **Next**.

Step 4 The Ready to Install the Program window appears. Click **Install**.

Note If a User Account Control warning appears, click **Allow - I trust this program** to proceed.

Step 5 The InstallShield Wizard Completed window appears. Click **Finish**.

Step 6 Connect the USB cable to the PC and the switch console port. The USB console port LED turns green, and the Found New Hardware Wizard appears. Follow the instructions to complete the driver installation.

Uninstalling the Cisco Microsoft Windows USB Driver

Uninstalling the Cisco Microsoft Windows USB Driver

Before you begin

Disconnect the switch console terminal before uninstalling the driver.

Procedure

Step 1 Run setup.exe for Windows 32-bit or setup(x64).exe for Windows-64bit. Click **Next.**

Step 2 The InstallShield Wizard for Cisco Virtual Com appears. Click **Next.**

Step 3 When the Program Maintenance window appears, select the Remove radio button. Click **Next.**

Step 4 When the Remove the Program window appears, click **Remove.**

Note If a User Account Control warning appears, click **Allow - I trust this program to proceed**.

Step 5 When the InstallShield Wizard Completed window appears, click **Finish.**

APPENDIX A

Technical Specifications

• Environmental and Physical Specifications, on page 53

Environmental and Physical Specifications

This table describes the environmental specifications.

Table 6: Environmental Specifications for the Switch

Environmental Ranges	
Operating temperature [3]	23 to 113°F (–5 to 45°C) **Note** • Always measure the operating temperature within 1 inches from the sides of the switch. • Note that the maximum operating temperature can be limited by the type of SFP used. Refer to the Datasheet for information about specific restrictions.
Storage temperature	–40 to 158°F (–40 to 70°C)
Relative humidity	5 to 90% (non-condensing)
Operating altitude	Up to 5000 ft (1500 m)
Storage altitude	Up to 15,000 ft (4500 m)

[3] Minimum ambient temperature for cold start is 32°F (0°C)

Table 7: Physical Specifications of the Switch

C9200CX-8P-2X2G	1.73 x 10.6 x 9.6 in. (4.4 x 26.9 x 24.4 cm)
C9200CX-12P-2X2G	1.73 x 10.6 x 9.6 in. (4.4 x 26.9 x 24.4 cm)

C9200CX-12T-2X2G	1.73 x 10.6 x 6.5 in. (4.4 x 26.9 x 16.5 cm)

Table 8: Weight Measurements

Switch Model	Weight
C9200CX-8P-2X2G	6.6 lb (2.99 kg)
C9200CX-12P-2X2G	6.6 lb (2.99 kg)
C9200CX-12T-2X2G	4.1 lb (1.86 kg)

APPENDIX B

Switch LEDs

- LEDs, on page 55
- System LED, on page 56
- Status (STAT) LED, on page 57
- Speed LED, on page 57
- PoE LED, on page 57
- Port LEDs and Modes, on page 57
- PD Power LED, on page 59
- Beacon LED, on page 59

LEDs

Switch Front Panel LEDs

You can use the switch LEDs to monitor switch activity and its performance.

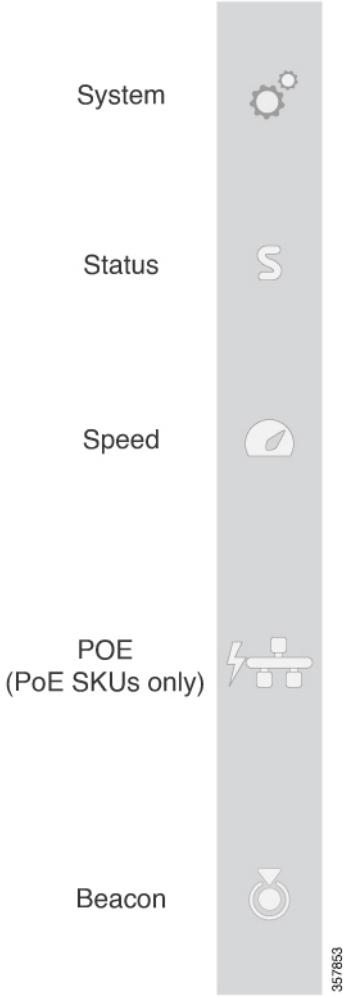

System LED

Table 9: System LED

Color	System Status
Off	System is not powered on.
Green	System is operating normally.
Blinking green	System is loading the software.
Amber	System is receiving power but is not functioning properly.

Status (STAT) LED

Table 10: Status LED

Color	System Status
Off	Status mode is disabled.
Green	Status mode is enabled. Port LEDs function as described in Port LEDs and Modes, on page 57.

Speed LED

LED Status	Link Status
Off	Speed mode is disabled.
Green	Speed mode is enabled. Port LEDs function as described in Port LEDs and Modes, on page 57.

PoE LED

The PoE LED indicates the status of the PoE mode: either PoE, PoE+ or UPOE.

Table 11: PoE LED

Color	Description
Off	PoE mode is not enabled. None of the 10/100/1000 ports have been denied power or are in a fault condition.
Green	PoE mode is enabled and Port LEDs function as described in Port LEDs and Modes, on page 57.

Port LEDs and Modes

Each Ethernet port has a port LED. These port LEDs, as a group or individually, display information about the switch and about the individual ports. To select or change a mode, press the Mode button until the desired mode is highlighted. When you change port modes, the meanings of the port LED colors also change.

Port Mode	Ports	LED Status	Link Status
STAT (port status)		Off	No link, or port was administratively shut down.
		Green	Link present, no activity.
		Blinking green	Activity. Port is sending or receiving data.
		Alternating green-amber	Link fault. Error frames can affect connectivity, and errors such as excessive collisions, CRC errors, and alignment and jabber errors are monitored for a link-fault indication.
		Amber	Port is blocked by Spanning Tree Protocol (STP) and is not forwarding data. After a port is reconfigured, the port LED can be amber for up to 30 seconds as STP checks the switch for possible loops.
		Blinking amber	Port is blocked by STP and is sending and receiving data.
SPEED	10/100/1000 ports	Off	Port is operating at 10 Mb/s.
		Green	Port is operating at 100 Mb/s.
		Blinking green (on for 100 ms, off for 1900 ms)	Port is operating at 1000 Mb/s.
	Uplink ports with 1G SFP module installed	Off	Port is operating at 10 Mb/s.
		Green	Port is operating at 100 Mb/s.
		Blinking green	Port is operating at 1000 Mb/s.
	Uplink ports with 10G SFP+ module installed	Off	Port is not operating
		Green	Port is operating at 10 Gb/s.
		Blinking green	Port is operating at 1 Gb/s.
PoE+[4]		Off	PoE mode is not enabled. None of the 10/100/1000 ports have been denied power or are in a fault condition.
		Green	PoE mode is enabled, and the port LED displays green when the switch port is providing power.
		Amber	PoE is disabled for the port.
		Blinking amber	PoE mode is off due to a fault condition.
		Alternating green and amber	PoE port is denied power because providing power to the powered device exceeds the switch power capacity.

[4] Only switches with PoE or PoE+ ports.

PD Power LED

The PD Power LED indicates the status of the additional LED under the PD port of C9200CX-12T.

Figure 31: PD port LED on C9200CX-12T

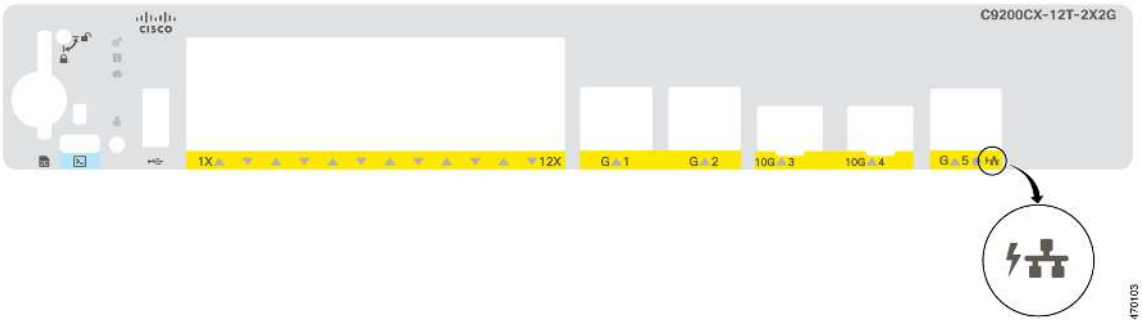

Table 12: PD Power LED

Color	Description
Off	PD power is not active.
Green	System is powered by PD power.
Amber	System has detected and classified PD power that is insufficient to power the system. **Note** • The LED glows amber to indicate a host PSE system in 802.3at mode where Class 6 Single Signature PD is not detected. • UPOE+ system, if using 802.3bt mode, can power up the system. • Auxiliary power input is of high priority and will be used, if available.

Beacon LED

The beacon LED on the front panel of the switch can be turned on by the administrator to indicate that the switch needs attention. It helps the administrator identify the switch. The beacon can be turned on by either pressing the button on the switch front panel, or by using the CLI.

Color/State	Description
Solid blue	The operator has indicated that the system needs attention.

THE SPECIFICATIONS AND INFORMATION REGARDING THE PRODUCTS IN THIS MANUAL ARE SUBJECT TO CHANGE WITHOUT NOTICE. ALL STATEMENTS, INFORMATION, AND RECOMMENDATIONS IN THIS MANUAL ARE BELIEVED TO BE ACCURATE BUT ARE PRESENTED WITHOUT WARRANTY OF ANY KIND, EXPRESS OR IMPLIED. USERS MUST TAKE FULL RESPONSIBILITY FOR THEIR APPLICATION OF ANY PRODUCTS.

THE SOFTWARE LICENSE AND LIMITED WARRANTY FOR THE ACCOMPANYING PRODUCT ARE SET FORTH IN THE INFORMATION PACKET THAT SHIPPED WITH THE PRODUCT AND ARE INCORPORATED HEREIN BY THIS REFERENCE. IF YOU ARE UNABLE TO LOCATE THE SOFTWARE LICENSE OR LIMITED WARRANTY, CONTACT YOUR CISCO REPRESENTATIVE FOR A COPY.

The following information is for FCC compliance of Class A devices: This equipment has been tested and found to comply with the limits for a Class A digital device, pursuant to part 15 of the FCC rules. These limits are designed to provide reasonable protection against harmful interference when the equipment is operated in a commercial environment. This equipment generates, uses, and can radiate radio-frequency energy and, if not installed and used in accordance with the instruction manual, may cause harmful interference to radio communications. Operation of this equipment in a residential area is likely to cause harmful interference, in which case users will be required to correct the interference at their own expense.

The following information is for FCC compliance of Class B devices: This equipment has been tested and found to comply with the limits for a Class B digital device, pursuant to part 15 of the FCC rules. These limits are designed to provide reasonable protection against harmful interference in a residential installation. This equipment generates, uses and can radiate radio frequency energy and, if not installed and used in accordance with the instructions, may cause harmful interference to radio communications. However, there is no guarantee that interference will not occur in a particular installation. If the equipment causes interference to radio or television reception, which can be determined by turning the equipment off and on, users are encouraged to try to correct the interference by using one or more of the following measures:

- Reorient or relocate the receiving antenna.
- Increase the separation between the equipment and receiver.
- Connect the equipment into an outlet on a circuit different from that to which the receiver is connected.
- Consult the dealer or an experienced radio/TV technician for help.

Modifications to this product not authorized by Cisco could void the FCC approval and negate your authority to operate the product.

The Cisco implementation of TCP header compression is an adaptation of a program developed by the University of California, Berkeley (UCB) as part of UCB's public domain version of the UNIX operating system. All rights reserved. Copyright © 1981, Regents of the University of California.

NOTWITHSTANDING ANY OTHER WARRANTY HEREIN, ALL DOCUMENT FILES AND SOFTWARE OF THESE SUPPLIERS ARE PROVIDED "AS IS" WITH ALL FAULTS. CISCO AND THE ABOVE-NAMED SUPPLIERS DISCLAIM ALL WARRANTIES, EXPRESSED OR IMPLIED, INCLUDING, WITHOUT LIMITATION, THOSE OF MERCHANTABILITY, FITNESS FOR A PARTICULAR PURPOSE AND NONINFRINGEMENT OR ARISING FROM A COURSE OF DEALING, USAGE, OR TRADE PRACTICE.

IN NO EVENT SHALL CISCO OR ITS SUPPLIERS BE LIABLE FOR ANY INDIRECT, SPECIAL, CONSEQUENTIAL, OR INCIDENTAL DAMAGES, INCLUDING, WITHOUT LIMITATION, LOST PROFITS OR LOSS OR DAMAGE TO DATA ARISING OUT OF THE USE OR INABILITY TO USE THIS MANUAL, EVEN IF CISCO OR ITS SUPPLIERS HAVE BEEN ADVISED OF THE POSSIBILITY OF SUCH DAMAGES.

Any Internet Protocol (IP) addresses and phone numbers used in this document are not intended to be actual addresses and phone numbers. Any examples, command display output, network topology diagrams, and other figures included in the document are shown for illustrative purposes only. Any use of actual IP addresses or phone numbers in illustrative content is unintentional and coincidental.

All printed copies and duplicate soft copies of this document are considered uncontrolled. See the current online version for the latest version.

Cisco has more than 200 offices worldwide. Addresses and phone numbers are listed on the Cisco website at www.cisco.com/go/offices.

The documentation set for this product strives to use bias-free language. For purposes of this documentation set, bias-free is defined as language that does not imply discrimination based on age, disability, gender, racial identity, ethnic identity, sexual orientation, socioeconomic status, and intersectionality. Exceptions may be present in the documentation due to language that is hardcoded in the user interfaces of the product software, language used based on standards documentation, or language that is used by a referenced third-party product.

Cisco and the Cisco logo are trademarks or registered trademarks of Cisco and/or its affiliates in the U.S. and other countries. To view a list of Cisco trademarks, go to this URL: https://www.cisco.com/c/en/us/about/legal/trademarks.html. Third-party trademarks mentioned are the property of their respective owners. The use of the word partner does not imply a partnership relationship between Cisco and any other company. (1721R)

© 2022 Cisco Systems, Inc. All rights reserved.