Liquid Freezer III 280 A-RGB

Multi Compatible All-in-One CPU Water Cooler with A-RGB

General Specifications

Compatibillity	Intel® LGA1851, LGA1700 | AMD® AM5, AM4
PI | NNPI	319 | 259
TIM	MX-6 (0.8 g)
Warranty	6 Years
Operating Ambient Temperature	0–40 °C
Weight	1765 g
LED-Connector	3-Pin A-RGB Connector

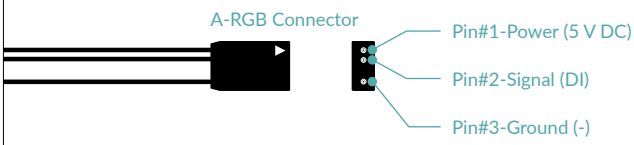

All-In-One Connector	4-Pin PWM Connector

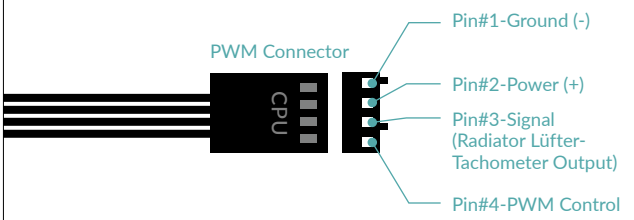

Split Connector	3x 4-Pin PWM Connector

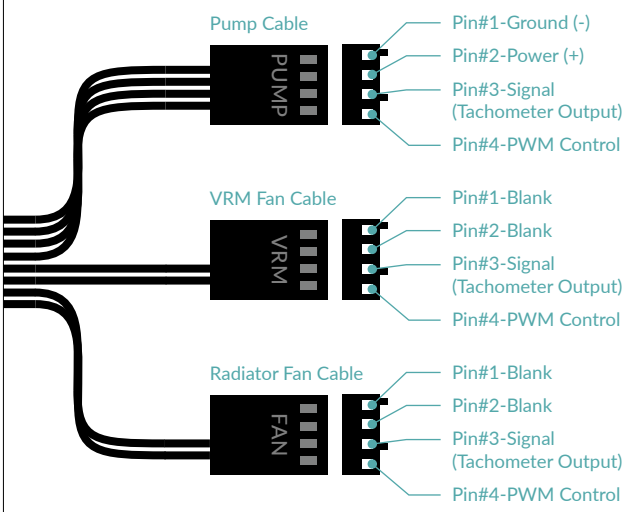

Pump	800–2800 rpm (PWM controlled)
Current | Voltage	0.35 A | 12 V DC
Cold Plate	Copper, Micro Skived Fins
Tube Length	450 mm
Tube Diameter	Outer: 12.4 mm | Inner: 6.0 mm
Radiator	
Material	Aluminium
Dimensions	317 (L) x 138 (W) x 38 (H) mm
VRM Modul	
VRM Fan	400–2500 rpm (PWM controlled)
Current | Voltage	0.05 A | 12 V DC
LEDs	12x A-RGB LEDs
Current | Voltage	0.40 A | 5 V DC

Radiator Fan Specifications

General	2x P14 PWM A-RGB
Speed	200–1900 rpm
Airflow	69.90 cfm | 117.06 m^3/h
Static Pressure	2.0 mm$H_2$0
Bearing	Fluid Dynamic Bearing
Current | Voltage	0.17 A | 12 V DC
Cable Lenght	40 mm
Connector	4-Pin PWM Connector
RGB Specifications	
LEDs	12x A-RGB LEDs
Current | Voltage	0.40 A | 5 V DC
Cable Lenght	40 mm + 80 mm Splitter Cable
Connector	3-Pin A-RGB Connector + 3-Pin Plug

Shipping Information – LF III 280 A-RGB (Black)

Box Dimension	335 (L) x 170 (W) x 155 (H) mm
Gross Weight	2300 g
SKU	ACFRE00143A
EAN	4895213704519
UPC	840033402286

Shipping Information – LF III 280 A-RGB (White)

Box Dimension	335 (L) x 170 (W) x 155 (H) mm
Gross Weight	2300 g
SKU	ACFRE00151A
EAN	4895213704557
UPC	840033402323

Liquid Freezer III 280 A-RGB

Multi Compatible All-in-One CPU Water Cooler with A-RGB

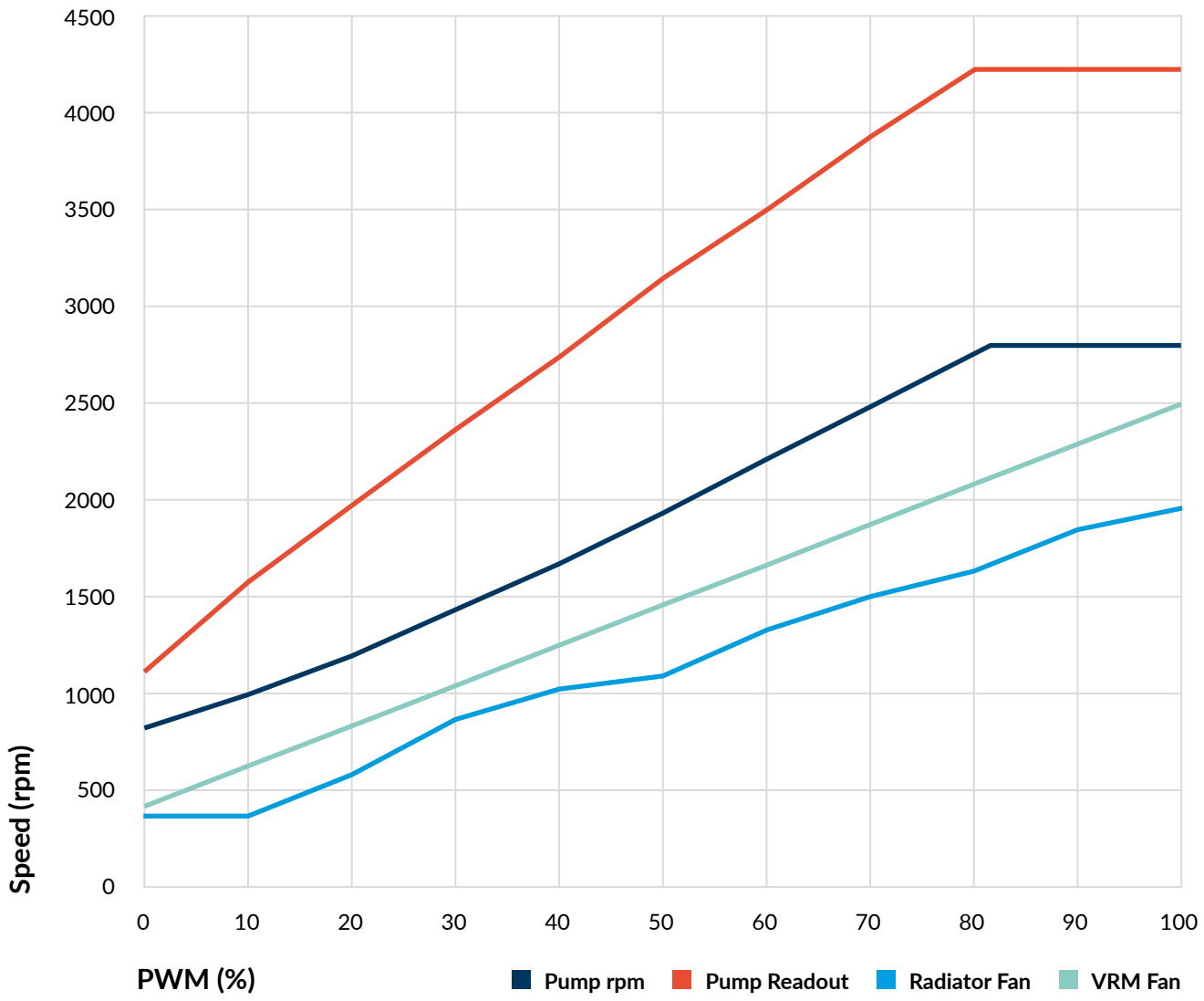

Liquid Freezer III 280 A-RGB

Multi Compatible All-in-One CPU Water Cooler with A-RGB

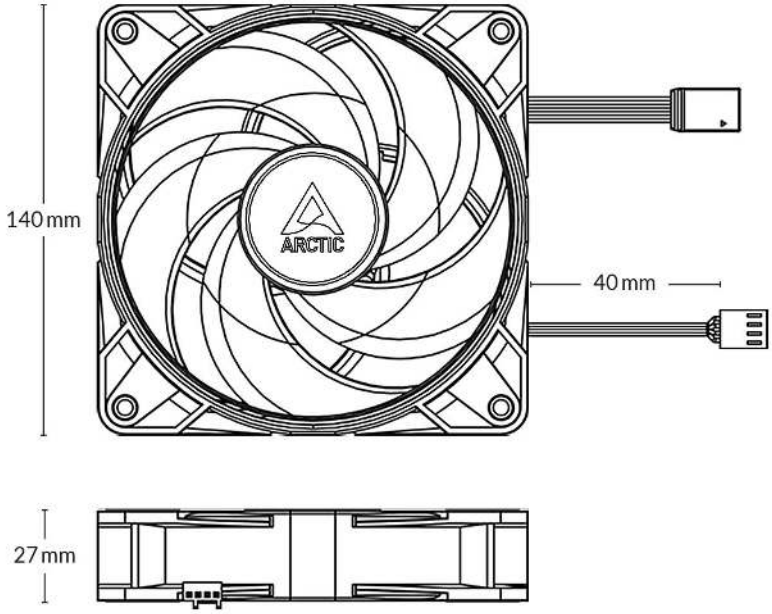

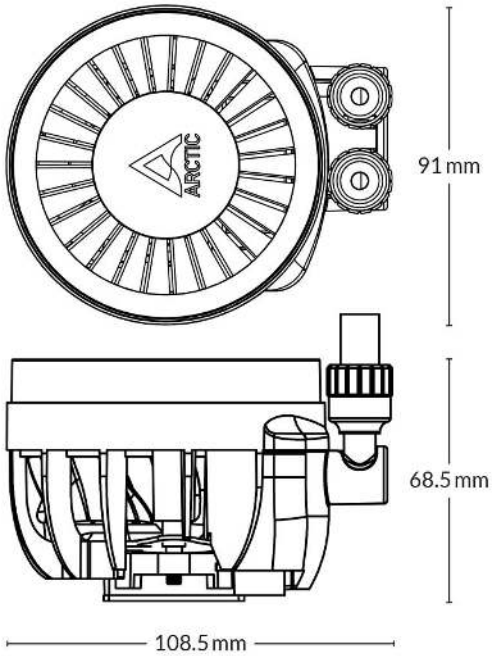

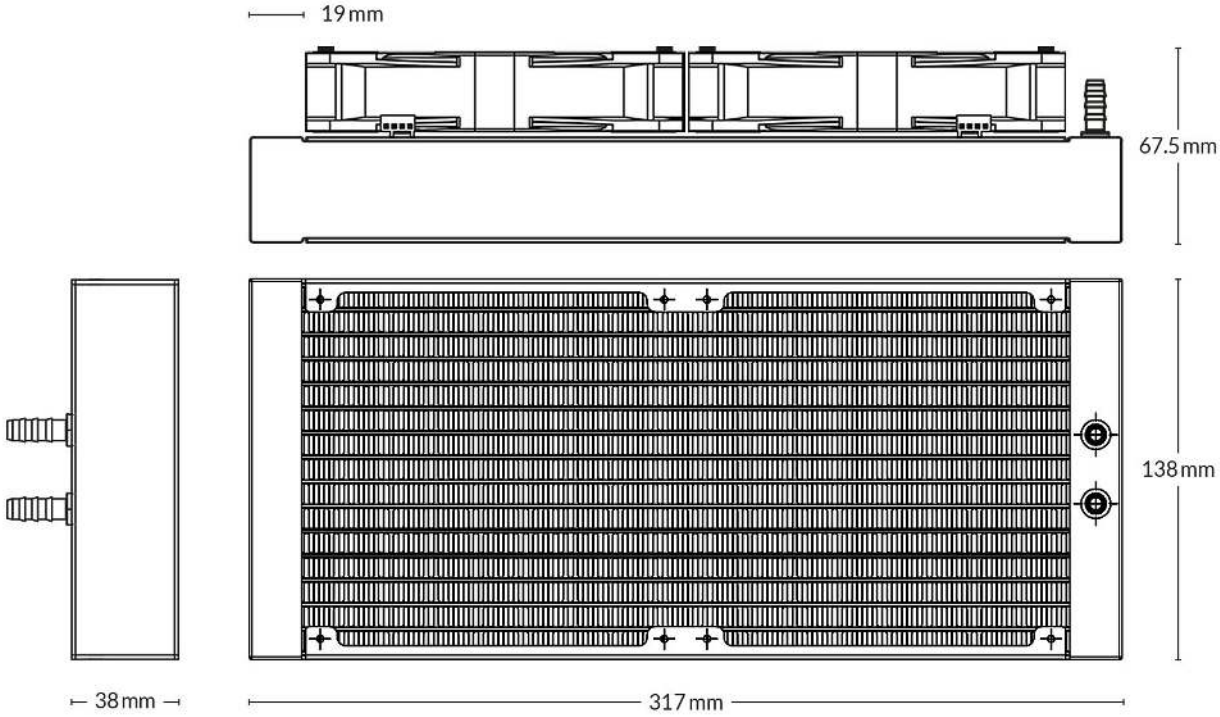

Carbon Neutral
green.arctic.de

All materials are compatible with RoHS requirements.

MORE INFORMATION

MANUALS

ARCTIC
arctic.de