BASIC M6.5

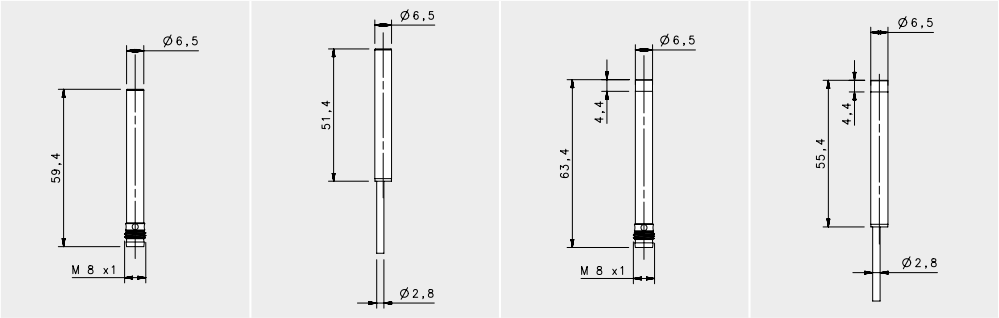

				STANDARD			
				FLUSH		NON FLUSH	
				M8 conn	cable	M8 conn	cable
NOMINAL SWITCHING DISTANCE				1,5 mm	1,5 mm	2 mm	2 mm
10-30 Vdc	PNP/NPN NO-NC	4 wires		---	---	---	---
			order No.	---	---	---	---
10-30 Vdc	PNP NO	3 wires		IS-65-A1-S1	IS-65-A1-03	IS-65-C1-S1	IS-65-C1-03
			order No.	95B066050	95B064730	95B066210	95B064890
10-30 Vdc	PNP NC	3 wires		IS-65-A2-S1	IS-65-A2-03	IS-65-C2-S1	IS-65-C2-03
			order No.	95B066090	95B064770	95B066250	95B066300
10-30 Vdc	NPN NO	3 wires		IS-65-A3-S1	IS-65-A3-03	IS-65-C3-S1	IS-65-C3-03
			order No.	95B064970	95B064650	95B066130	95B064810
10-30 Vdc	NPN NC	3 wires		IS-65-A4-S1	IS-65-A4-03	IS-65-C4-S1	IS-65-C4-03
			order No.	95B066010	95B064690	95B066170	95B064850
10-30 Vdc	PNP NO-NC	4 wires		---	---	---	---
			order No.	---	---	---	---
10-30 Vdc	NPN NO-NC	4 wires		---	---	---	---
			order No.	---	---	---	---
10-30 Vdc	NO-NC	2 wires		---	---	---	---
			order No.	---	---	---	---
20-250 Vac/Vdc	NO	2 wires		---	---	---	---
			order No.	---	---	---	---
20-250 Vac/Vdc	NC	2 wires		---	---	---	---
			order No.	---	---	---	---
20-250 Vac	NO	2/3 wires		---	---	---	---
			order No.	---	---	---	---
10-30 Vdc	Analog 0-20 mA	3 wires		---	---	---	---
			order No.	---	---	---	---
NAMUR amplifier	NAMUR	2 wires		---	---	---	---
			order No.	---	---	---	---

Nominal Voltage	10-30 Vdc (-15/10%)	10-30 Vdc (-15/10%)	10-30 Vdc (-15/10%)	10-30 Vdc (-15/10%)
Residual Ripple	< 10%	< 10%	< 10%	< 10%
Hysteresis	< 10%	< 10%	< 10%	< 10%
Max. Output Current	200 mm	200 mA	200 mm	200 mA
Min. Output Current	---	---	---	---
Residual Current	< 1,6 mA	< 1,6 mA	< 1,6 mA	< 1,6 mA
Voltage Drop	< 1,2 V (I=100 mA)	< 1,2 V (I=100 mA)	< 1,2 V (I=100 mA)	< 1,2 V (I=100 mA)
Operation Led	Yellow	Yellow	Yellow	Yellow
Switching Frequency	1000 Hz	1000 Hz	1000 Hz	1000 Hz
Start Up Delay	< 50 ms	< 50 ms	< 50 ms	< 50 ms
Repeatability	< 3%	< 3%	< 3%	< 3%
Short Circuit Protection	Present (self-resetting)	Present (self-resetting)	Present (self-resetting)	Present (self-resetting)
Electric Protection	Against polarity reversal inductive loads	Against polarity reversal inductive loads	Against polarity reversal inductive loads	Against polarity reversal inductive loads
Temperature Limit	(-25 ... +70 °C)	(-25 ... +70 °C)	(-25 ... +70 °C)	(-25 ... +70 °C)
Protection Degree	IP67	IP67	IP67	IP67
Cable Length	---	2 m	---	2 m
Cable Section	---	3x 0,14 mm²	---	3x 0,14 mm²
Housing Material	Nickel-plated brass	Nickel-plated brass	Nickel-plated brass	Nickel-plated brass
Active Face	LCP	LCP	LCP	LCP
Tightening torque	---	---	---	---
Weight - Cable Output	---	80 g	---	80 g
Weight - Connector Output	40 g	---	40 g	---

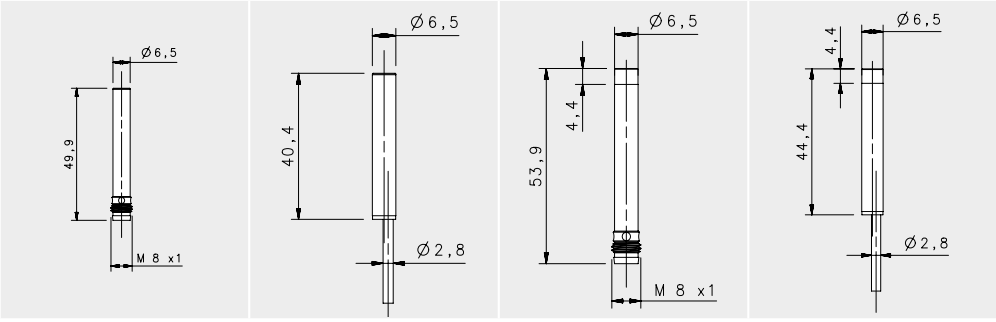

SHORT			
FLUSH		NON FLUSH	
M8 conn	cable	M8 conn	cable
1,5 mm	**1,5 mm**	**2 mm**	**2 mm**
---	---	---	---
---	---	---	---
IS-65-B1-S1	IS-65-B1-03	IS-65-D1-S1	IS-65-D1-03
95B066070	95B064750	95B066230	95B064910
IS-65-B2-S1	IS-65-B2-03	IS-65-D2-S1	IS-65-D2-03
95B066110	95B064790	95B066270	95B064950
IS-65-B3-S1	IS-65-B3-03	IS-65-D3-S1	IS-65-D3-03
95B064990	95B064670	95B066150	95B064830
IS-65-B4-S1	IS-65-B4-03	IS-65-D4-S1	IS-65-D4-03
95B066030	95B064710	95B066190	95B066190
---	---	---	---
---	---	---	---
---	---	---	---
---	---	---	---
---	---	---	---
---	---	---	---
---	---	---	---
---	---	---	---
---	---	---	---
---	---	---	---
---	---	---	---
---	---	---	---
---	---	---	---
---	---	---	---
---	---	---	---
---	---	---	---
---	---	---	---
10-30 Vdc (-15/10%)	10-30 Vdc (-15/10%)	10-30 Vdc (-15/10%)	10-30 Vdc (-15/10%)
< 10%	< 10%	< 10%	< 10%
< 10%	< 10%	< 10%	< 10%
200 mA	200 mA	200 mA	200 mA
---	---	---	---
< 10 mA	< 10 mA	< 10 mA	< 10 mA
< 1,2 V (I=100mA)	< 1,2 V (I=100mA)	< 1,2 V (I=100mA)	< 1,2 V (I=100mA)
Yellow	Yellow	Yellow	Yellow
1000 Hz	1000 Hz	1000 Hz	1000 Hz
< 50 ms	< 50 ms	< 50 ms	< 50 ms
< 3%	< 3%	< 3%	< 3%
Present (self-resetting)	Present (self-resetting)	Present (self-resetting)	Present (self-resetting)
Against polarity reversal inductive loads	Against polarity reversal inductive loads	Against polarity reversal inductive loads	Against polarity reversal inductive loads
(-25 ... +70 °C)	(-25 ... +70 °C)	(-25 ... +70 °C)	(-25 ... +70 °C)
IP67	IP67	IP67	IP67
---	2 m	---	2 m
---	3 x 0,14 mm²	---	3 x 0,14 mm²
Nickel-plated brass	Nickel-plated brass	Nickel-plated brass	Nickel-plated brass
LCP	LCP	LCP	LCP
---	---	---	---
---	80 g	---	80 g
40 g	---	40 g	---

3 wires PNP or NPN

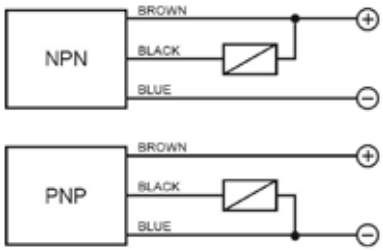

M8 3 pole

CONTACTS CONFIGURATION

Available	Contacts numbers		
	1 BROWN	3 BLUE	4 BLACK
NPN/PNP	+	–	NO/NC

BASIC M6.5

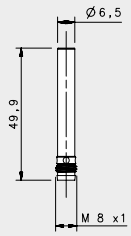

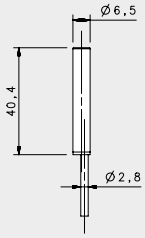

SHORT X2

FLUSH

				M8 conn	cable
NOMINAL SWITCHING DISTANCE				**2 mm**	**2 mm**
10-30 Vdc	PNP/NPN NO-NC	4 wires		---	---
			order No.	---	---
10-30 Vdc	PNP NO	3 wires		IS-65-G1-S1	IS-65-G1-03
			order No.	95B066060	95B064740
10-30 Vdc	PNP NC	3 wires		IS-65-G2-S1	IS-65-G2-03
			order No.	95B066100	95B064780
10-30 Vdc	NPN NO	3 wires		IS-65-G3-S1	IS-65-G3-03
			order No.	95B064980	95B064660
10-30 Vdc	NPN NC	3 wires		IS-65-G4-S1	IS-65-G4-03
			order No.	95B066020	95B064700
10-30 Vdc	PNP NO-NC	4 wires		---	---
			order No.	---	---
10-30 Vdc	NPN NO-NC	4 wires		---	---
			order No.	---	---
10-30 Vdc	NO-NC	2 wires		---	---
			order No.	---	---
20-250 Vac/Vdc	NO	2 wires		---	---
			order No.	---	---
20-250 Vac/Vdc	NC	2 wires		---	---
			order No.	---	---
20-250 Vac	NO	2/3 wires		---	---
			order No.	---	---
10-30 Vdc	Analog 0-20 mA	3 wires		---	---
			order No.	---	---
NAMUR amplifier	NAMUR	2 wires		---	---
			order No.	---	---

Nominal Voltage	10-30 Vdc (-15/10%)	10-30 Vdc (-15/10%)
Residual Ripple	< 10%	< 10%
Hysteresis	< 10%	< 10%
Max. Output Current	200 mA	200 mA
Min. Output Current	---	---
Residual Current	< 10 mA	< 10 mA
Voltage Drop	< 1,2 V (I=100mA)	< 1,2 V (I=100mA)
Operation Led	Yellow	Yellow
Switching Frequency	500 Hz	500 Hz
Start Up Delay	< 75 ms	< 75 ms
Repeatability	< 3%	< 3%
Short Circuit Protection	Present (self-resetting)	Present (self-resetting)
Electric Protection	Against polarity reversal inductive loads	Against polarity reversal inductive loads
Temperature Limit	(-25 ... +70 °C)	(-25 ... +70 °C)
Protection Degree	IP67	IP67
Cable Length	---	2 m
Cable Section	---	3 x 0,14 mm²
Housing Material	Nickel-plated brass	Nickel-plated brass
Active face	LCP	LCP
Tightening torque	---	---
Weight - Cable Output	---	80 g
Weight - Connector Output	40 g	---

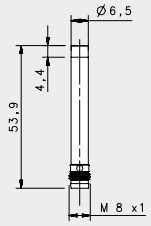

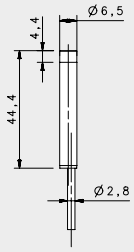

SHORT X 2	
NON FLUSH	
M8 conn	cable
3 mm	**3 mm**
---	---
---	---
IS-65-H1-S1	IS-65-H1-03
95B066220	95B064900
IS-65-H2-S1	IS-65-H2-03
95B066260	95B064940
IS-65-H3-S1	IS-65-H3-03
95B066140	95B064820
IS-65-H4-S1	IS-65-H4-03
95B066180	95B064860
---	---
---	---
---	---
---	---
---	---
---	---
---	---
---	---
---	---
---	---
---	---
---	---
---	---
---	---
---	---
---	---
10-30 Vdc (-15/10%)	10-30 Vdc (-15/10%)
< 10%	< 10%
< 10%	< 10%
200 mA	200 mA
---	---
< 10 mA	< 10 mA
< 1,2 V (I=100mA)	< 1,2 V (I=100mA)
Yellow	Yellow
500 Hz	500 Hz
< 75 ms	< 75 ms
< 3%	< 3%
Present (self-resetting)	Present (self-resetting)
Against polarity reversal inductive loads	Against polarity reversal inductive loads
(-25 ... +70 °C)	(-25 ... +70 °C)
IP67	IP67
---	2 m
---	3 x 0,14 mm²
Nickel-plated brass	Nickel-plated brass
LCP	LCP
---	---
---	80 g
40 g	---

3 wires PNP or NPN

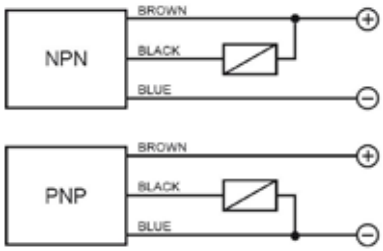

M8 3 pole

CONTACTS CONFIGURATION

Available	Contacts numbers		
	1 BROWN	3 BLUE	4 BLACK
NPN/PNP	+	–	NO/NC

BASIC M8

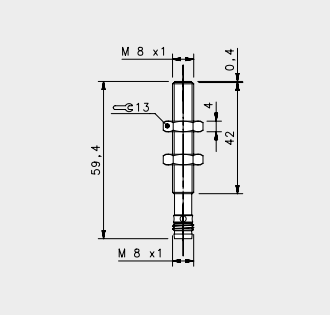

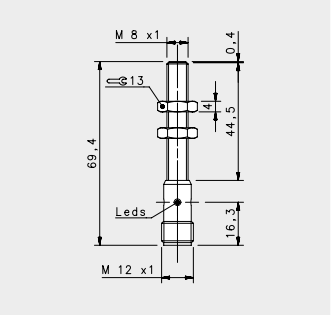

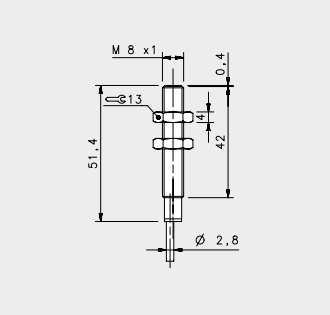

				STANDARD		
				FLUSH		
				M8 conn	M12 conn	cable
NOMINAL SWITCHING DISTANCE				**1,5 mm**	**1,5 mm**	**1,5 mm**
10-30 Vdc	PNP/NPN NO-NC	4 wires		---	---	---
			order No.	---	---	---
10-30 Vdc	PNP NO	3 wires		IS-08-A1-S1	IS-08-A1-S2	IS-08-A1-03
			order No.	95B061141	95B061131	95B061121
10-30 Vdc	PNP NC	3 wires		IS-08-A2-S1	IS-08-A2-S2	IS-08-A2-03
			order No.	95B061171	95B061161	95B061151
10-30 Vdc	NPN NO	3 wires		IS-08-A3-S1	IS-08-A3-S2	IS-08-A3-03
			order No.	95B061081	95B061071	95B061061
10-30 Vdc	NPN NC	3 wires		IS-08-A4-S1	IS-08-A4-S2	IS-08-A4-03
			order No.	95B061111	95B061101	95B061091
10-30 Vdc	PNP NO-NC	4 wires		---	---	---
			order No.	---	---	---
10-30 Vdc	NPN NO-NC	4 wires		---	---	---
			order No.	---	---	---
10-30 Vdc	NO-NC	2 wires		---	---	---
			order No.	---	---	---
20-250 Vac/Vdc	NO	2 wires		---	---	---
			order No.	---	---	---
20-250 Vac/Vdc	NC	2 wires		---	---	---
			order No.	---	---	---
20-250 Vac	NO	2/3 wires		---	---	---
			order No.	---	---	---
10-30 Vdc	Analog 0-20 mA	3 wires		---	---	---
			order No.	---	---	---
NAMUR amplifier	NAMUR	2 wires		---	---	---
			order No.	---	---	---

Nominal Voltage	10-30 Vdc (-15/10%)	10-30 Vdc (-15/10%)	10-30 Vdc (-15/10%)
Residual Ripple	< 10%	< 10%	< 10%
Hysteresis	< 10%	< 10%	< 10%
Max. Output Current	200mA	200mA	200mA
Min. Output Current	---	---	---
Residual Current	< 10 mA	< 10 mA	< 10 mA
Voltage Drop	< 1,2 V (I=100mA)	< 1,2 V (I=100mA)	< 1,2 V (I=100mA)
Operation Led	Yellow	Yellow	Yellow
Switching Frequency	1000 Hz	1000 Hz	1000 Hz
Start Up Delay	< 50 ms	< 50 ms	< 50 ms
Repeatability	< 3%	< 3%	< 3%
Short Circuit Protection	Present (self-resetting)	Present (self-resetting)	Present (self-resetting)
Electric Protection	Against polarity reversal inductive loads	Against polarity reversal inductive loads	Against polarity reversal inductive loads
Temperature Limit	(-25 ... +70 °C)	(-25 ... +70 °C)	(-25 ... +70 °C)
Protection Degree	IP67	IP67	IP67
Cable Length	---	---	2 m
Cable Section	---	---	3x 0,14 mm²
Housing Material	Nickel-plated brass	Nickel-plated brass	Nickel-plated brass
Active face	LCP	LCP	LCP
Tightening torque	4Nm	4Nm	4Nm
Weight - Cable Output			80 g
Weight - Connector Output	35g	55g	---

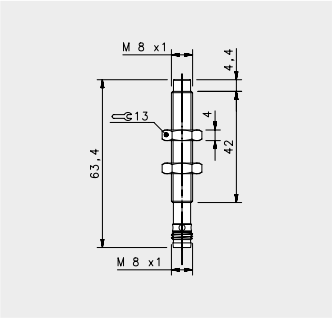

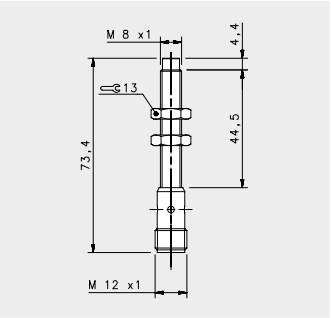

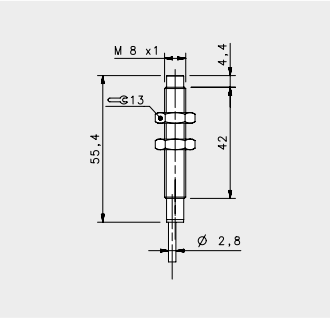

STANDARD		
NON FLUSH		
M8 conn	M12 conn	cable
2 mm	**2 mm**	**2 mm**
---	---	---
---	---	---
IS-08-C1-S1	IS-08-C1-S2	IS-08-C1-03
95B061541	95B061531	95B061521
IS-08-C2-S1	IS-08-C2-S2	IS-08-C2-03
95B061571	95B061561	95B061551
IS-08-C3-S1	IS-08-C3-S2	IS-08-C3-03
95B061481	95B061471	95B066410
IS-08-C4-S1	IS-08-C4-S2	IS-08-C4-03
95B061511	95B061501	95B066450
---	---	---
---	---	---
---	---	---
---	---	---
---	---	---
---	---	---
---	---	---
---	---	---
---	---	---
---	---	---
---	---	---
---	---	---
---	---	---
---	---	---
---	---	---
---	---	---
---	---	---
---	---	---
---	---	---
10-30 Vdc (-15/10%)	10-30 Vdc (-15/10%)	10-30 Vdc (-15/10%)
< 10%	< 10%	< 10%
< 10%	< 10%	< 10%
200mA	200mA	200mA
---	---	---
< 10 mA	< 10 mA	< 10 mA
< 1,2 V (I=100mA)	< 1,2 V (I=100mA)	< 1,2 V (I=100mA)
Yellow	Yellow	Yellow
1000 Hz	1000 Hz	1000 Hz
< 50 ms	< 50 ms	< 50 ms
< 3%	< 3%	< 3%
Present (self-resetting)	Present (self-resetting)	Present (self-resetting)
Against polarity reversal inductive loads	Against polarity reversal inductive loads	Against polarity reversal inductive loads
(-25 ... +70 °C)	(-25 ... +70 °C)	(-25 ... +70 °C)
IP67	IP67	IP67
---	---	2 m
---	---	3x 0,14 mm²
Nickel-plated brass	Nickel-plated brass	Nickel-plated brass
LCP	LCP	LCP
4Nm	4Nm	4Nm
		80 g
35g	55g	---

3 wires PNP or NPN

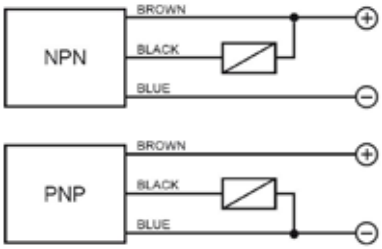

M12 3 pole

CONTACTS CONFIGURATION

Available	Contacts numbers			
	1	2	3	4
(NO or NC)	+		–	NO/NC

M8 3 pole

CONTACTS CONFIGURATION

Available	Contacts numbers		
	1 BROWN	3 BLUE	4 BLACK
NPN/PNP	+	–	NO/NC

BASIC M8

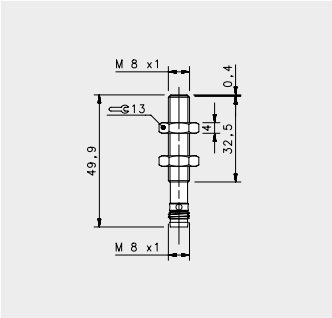

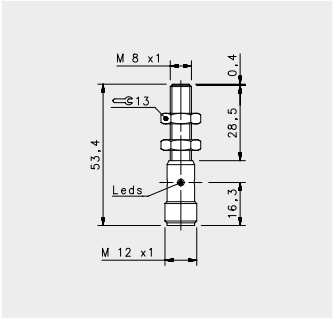

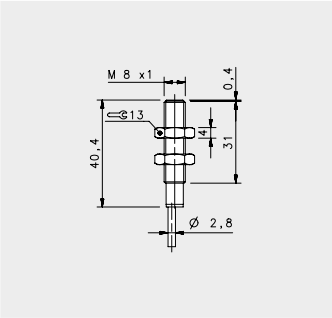

				SHORT		
				FLUSH		
				M8 conn	M12 conn	cable
NOMINAL SWITCHING DISTANCE				**1,5 mm**	**1,5 mm**	**1,5 mm**
10-30 Vdc	PNP/NPN NO-NC	4 wires		---	---	---
			order No.	---	---	---
10-30 Vdc	PNP NO	3 wires		IS-08-B1-S1	IS-08-B1-S2	IS-08-B1-03
			order No.	95B066860	95B066590	95B061921
10-30 Vdc	PNP NC	3 wires		IS-08-B2-S1	IS-08-B2-S2	IS-08-B2-03
			order No.	95B066890	95B066620	95B061951
10-30 Vdc	NPN NO	3 wires		IS-08-B3-S1	IS-08-B3-S2	IS-08-B3-03
			order No.	95B066810	95B066530	95B061861
10-30 Vdc	NPN NC	3 wires		IS-08-B4-S1	IS-08-B4-S2	IS-08-B4-03
			order No.	95B066830	95B066560	95B061891
10-30 Vdc	PNP NO-NC	4 wires		---	---	---
			order No.	---	---	---
10-30 Vdc	NPN NO-NC	4 wires		---	---	---
			order No.	---	---	---
10-30 Vdc	NO-NC	2 wires		---	---	---
			order No.	---	---	---
20-250 Vac/Vdc	NO	2 wires		---	---	---
			order No.	---	---	---
20-250 Vac/Vdc	NC	2 wires		---	---	---
			order No.	---	---	---
20-250 Vac	NO	2/3 wires		---	---	---
			order No.	---	---	---
10-30 Vdc	Analog 0-20 mA	3 wires		---	---	---
			order No.	---	---	---
NAMUR amplifier	NAMUR	2 wires		---	---	---
			order No.	---	---	---

Nominal Voltage	10-30 Vdc (-15/10%)	10-30 Vdc (-15/10%)	10-30 Vdc (-15/10%)
Residual Ripple	< 10%	< 10%	< 10%
Hysteresis	< 10%	< 10%	< 10%
Max. Output Current	200mA	200mA	200mA
Min. Output Current	---	---	---
Residual Current	< 10 mA	< 10 mA	< 10 mA
Voltage Drop	< 1,2 V (I=100mA)	< 1,2 V (I=100mA)	< 1,2 V (I=100mA)
Operation Led	Yellow	Yellow	Yellow
Switching Frequency	1000 Hz	1000 Hz	1000 Hz
Start Up Delay	< 50 ms	< 50 ms	< 50 ms
Repeatability	< 3%	< 3%	< 3%
Short Circuit Protection	Present (self-resetting)	Present (self-resetting)	Present (self-resetting)
Electric Protection	Against polarity reversal inductive loads	Against polarity reversal inductive loads	Against polarity reversal inductive loads
Temperature Limit	(-25 ... +70 °C)	(-25 ... +70 °C)	(-25 ... +70 °C)
Protection Degree	IP67	IP67	IP67
Cable Length	---	---	2 m
Cable Section	---	---	3 x 0,14 mm²
Housing Material	Nickel-plated brass	Nickel-plated brass	Nickel-plated brass
Active face	LCP	LCP	LCP
Tightening torque	4Nm	4Nm	4Nm
Weight - Cable Output			80 g
Weight - Connector Output	35g	55g	---

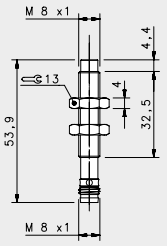

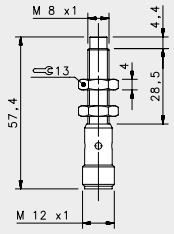

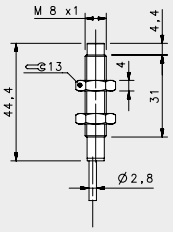

SHORT		
NON FLUSH		
M8 conn	M12 conn	cable
2 mm	**2 mm**	**2 mm**
---	---	---
---	---	---
IS-08-D1-S1	IS-08-D1-S2	IS-08-D1-03
95B066970	95B066700	95B062321
IS-08-D2-S1	IS-08-D2-S2	IS-08-D2-03
95B067000	95B066720	95B062351
IS-08-D3-S1	IS-08-D3-S2	IS-08-D3-03
95B066920	95B066650	95B066430
IS-08-D4-S1	IS-08-D4-S2	IS-08-D4-03
95B066940	95B066670	95B062291
---	---	---
---	---	---
---	---	---

BASIC M8

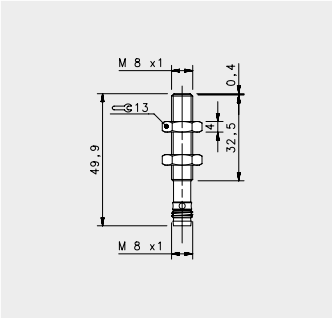

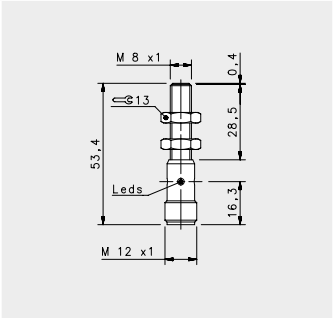

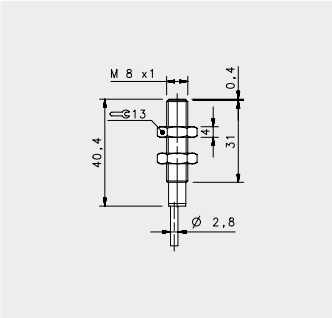

SHORT X2

FLUSH

				M8 conn	M12 conn	cable
NOMINAL SWITCHING DISTANCE				**2 mm**	**2 mm**	**2 mm**
10-30 Vdc	PNP/NPN NO-NC	4 wires		---	---	---
			order No.	---	---	---
10-30 Vdc	PNP NO	3 wires		IS-08-G1-S1	IS-08-G1-S2	IS-08-G1-03
			order No.	95B066850	95B066580	95B066370
10-30 Vdc	PNP NC	3 wires		IS-08-G2-S1	IS-08-G2-S2	IS-08-G2-03
			order No.	95B066880	95B066610	95B066390
10-30 Vdc	NPN NO	3 wires		IS-08-G3-S1	IS-08-G3-S2	IS-08-G3-03
			order No.	95B066800	95B066520	95B066330
10-30 Vdc	NPN NC	3 wires		IS-08-G4-S1	IS-08-G4-S2	IS-08-G4-03
			order No.	95B063131	95B066550	95B066350
10-30 Vdc	PNP NO-NC	4 wires		---	---	---
			order No.	---	---	---
10-30 Vdc	NPN NO-NC	4 wires		---	---	---
			order No.	---	---	---
10-30 Vdc	NO-NC	2 wires		---	---	---
			order No.	---	---	---
20-250 Vac/Vdc	NO	2 wires		---	---	---
			order No.	---	---	---
20-250 Vac/Vdc	NC	2 wires		---	---	---
			order No.	---	---	---
20-250 Vac	NO	2/3 wires		---	---	---
			order No.	---	---	---
10-30 Vdc	Analog 0-20 mA	3 wires		---	---	---
			order No.	---	---	---
NAMUR amplifier	NAMUR	2 wires		---	---	---
			order No.	---	---	---

Nominal Voltage	10-30 Vdc (-15/10%)	10-30 Vdc (-15/10%)	10-30 Vdc (-15/10%)
Residual Ripple	< 10%	< 10%	< 10%
Hysteresis	< 10%	< 10%	< 10%
Max. Output Current	200mA	200mA	200mA
Min. Output Current	---	---	---
Residual Current	< 10 mA	< 10 mA	< 10 mA
Voltage Drop	< 1,2 V (I=100mA)	< 1,2 V (I=100mA)	< 1,2 V (I=100mA)
Operation Led	Yellow	Yellow	Yellow
Switching Frequency	500 Hz	500 Hz	500 Hz
Start Up Delay	< 75 ms	< 75 ms	< 75 ms
Repeatability	< 3%	< 3%	< 3%
Short Circuit Protection	Present (self-resetting)	Present (self-resetting)	Present (self-resetting)
Electric Protection	Against polarity reversal inductive loads	Against polarity reversal inductive loads	Against polarity reversal inductive loads
Temperature Limit	(-25 ... +60 °C)	(-25 ... +60 °C)	(-25 ... +70 °C)
Protection Degree	IP67	IP67	IP67
Cable Length	---	---	2 m
Cable Section	---	---	3 x 0,14 mm²
Housing Material	Nickel-plated brass	Nickel-plated brass	Nickel-plated brass
Active face	LCP	LCP	LCP
Tightening torque	4Nm	4Nm	4Nm
Weight - Cable Output			80 g
Weight - Connector Output	35g	55g	---

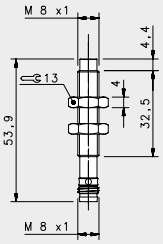

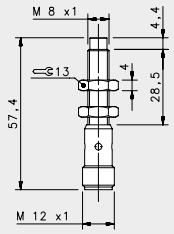

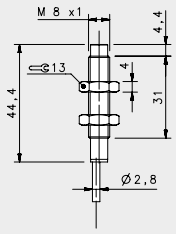

SHORT X2		
NON FLUSH		
M8 conn	M12 conn	cable
3 mm	**3 mm**	**3 mm**
---	---	---
---	---	---
IS-08-H1-S1	IS-08-H1-S2	IS-08-H1-03
95B066960	95B066690	95B066480
IS-08-H2-S1	IS-08-H2-S2	IS-08-H2-03
95B066990	95B063301	95B066500
IS-08-H3-S1	IS-08-H3-S2	IS-08-H3-03
95B066910	95B066640	95B066420
IS-08-H4-S1	IS-08-H4-S2	IS-08-H4-03
95B063251	95B063241	95B066460
---	---	---
---	---	---
---	---	---

BASIC M12

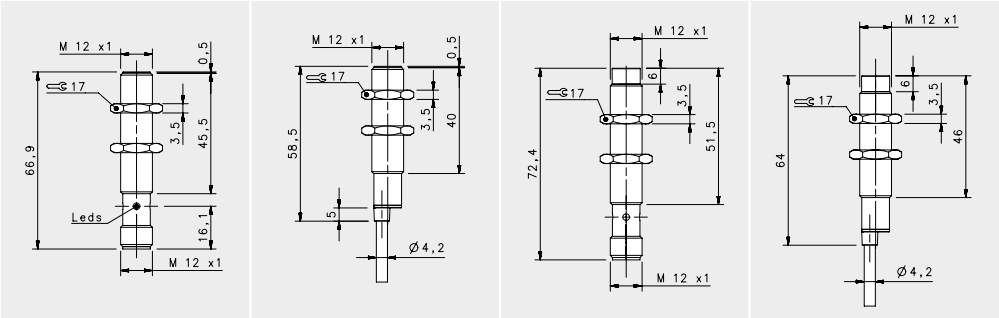

				STANDARD			
				FLUSH		NON FLUSH	
				M12 conn	cable	M12 conn	cable
NOMINAL SWITCHING DISTANCE				**2 mm**	**2 mm**	**4 mm**	**4 mm**
10-30 Vdc	PNP/NPN NO-NC	4 wires		IS-12-A0-S2	IS-12-A0-03	IS-12-C0-S2	IS-12-C0-03
			order No.	95B064060	95B064030	95B064080	95B064040
10-30 Vdc	PNP NO	3 wires		IS-12-A1-S2	IS-12-A1-03	IS-12-C1-S2	IS-12-C1-03
			order No.	95B061251	95B061241	95B061651	95B061641
10-30 Vdc	PNP NC	3 wires		IS-12-A2-S2	IS-12-A2-03	IS-12-C2-S2	IS-12-C2-03
			order No.	95B061281	95B061271	95B061681	95B061671
10-30 Vdc	NPN NO	3 wires		IS-12-A3-S2	IS-12-A3-03	IS-12-C3-S2	IS-12-C3-03
			order No.	95B061191	95B061181	95B061591	95B061581
10-30 Vdc	NPN NC	3 wires		IS-12-A4-S2	IS-12-A4-03	IS-12-C4-S2	IS-12-C4-03
			order No.	95B061221	95B061211	95B061621	95B061611
10-30 Vdc	PNP NO-NC	4 wires		---	---	---	---
			order No.	---	---	---	---
10-30 Vdc	NPN NO-NC	4 wires		---	---	---	---
			order No.	---	---	---	---
10-30 Vdc	NO-NC	2 wires		IS-12-A9-S2	IS-12-A9-03	IS-12-C9-S2	IS-12-C9-03
			order No.	95B063931	95B064100	95B064140	95B064110
20-250 Vac/Vdc	NO	2 wires		---	---	---	---
			order No.	---	---	---	---
20-250 Vac/Vdc	NC	2 wires		---	---	---	---
			order No.	---	---	---	---
20-250 Vac	NO	2/3 wires		---	---	---	---
			order No.	---	---	---	---
10-30 Vdc	Analog 0-20 mA	3 wires		---	---	---	---
			order No.	---	---	---	---
NAMUR amplifier	NAMUR	2 wires		---	---	---	---
			order No.	---	---	---	---

Nominal Voltage	10-30 Vdc (-15/10%)	10-30 Vdc (-15/10%)	10-30 Vdc (-15/10%)	10-30 Vdc (-15/10%)
Residual Ripple	< 10%	< 10%	< 10%	< 10%
Hysteresis	< 10%	< 10%	< 10%	< 10%
Max. Output Current	200mA; 100 mA (2wires)	200mA; 100 mA (2wires)	200mA; 100 mA (2wires)	200mA; 100 mA (2wires)
Min. Output Current	> 1,6 mA (2wires)	> 1,6 mA (2wires)	> 1,6 mA (2wires)	> 1,6 mA (2wires)
Residual Current	< 10mA; < 1,6 mA (2wires)	< 10mA; < 1,6 mA (2wires)	< 10mA; < 1,6 mA (2wires)	< 10mA; < 1,6 mA (2wires)
Voltage Drop	< 1,8V; < 6,5 V (2wires)	< 1,8V; < 6,5 V (2wires)	< 1,8V; < 6,5 V (2wires)	< 1,8V; < 6,5 V (2wires)
Operation Led	Yellow	Yellow	Yellow	Yellow
Switching Frequency	1000 Hz/200 Hz (2 wires NO-NC)	1000 Hz/200 Hz (2 wires NO-NC)	1000 Hz/200 Hz (2 wires NO-NC)	1000 Hz/200 Hz (2 wires NO-NC)
Start Up Delay	< 50 ms	< 50 ms	< 50 ms	< 50 ms
Repeatability	< 3%	< 3%	< 3%	< 3%
Short Circuit Protection	Present (self-resetting)	Present (self-resetting)	Present (self-resetting)	Present (self-resetting)
Electric Protection	Against polarity reversal inductive loads	Against polarity reversal inductive loads	Against polarity reversal inductive loads	Against polarity reversal inductive loads
Temperature Limit	(-25 ... +70 °C)	(-25 ... +70 °C)	(-25 ... +70 °C)	(-25 ... +70 °C)
Protection Degree	IP67	IP67	IP67	IP67
Cable Length	---	2 m	---	2 m
Cable Section	---	2 x 0,34 mm² 3 x 0,14 mm² 4 x 0,25 mm²	---	2 x 0,34 mm² 3 x 0,14 mm² 4 x 0,25 mm²
Housing Material	Nickel-plated brass	Nickel-plated brass	Nickel-plated brass	Nickel-plated brass
Active face	LCP	LCP	LCP	LCP
Tightening torque	10Nm	10Nm	10Nm	10Nm
Weight - Cable Output	---	110 g	---	110 g
Weight - Connector Output	60 g	---	60 g	---

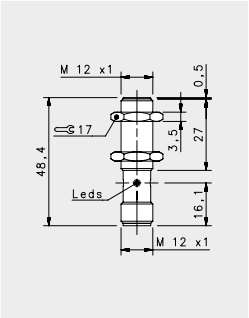

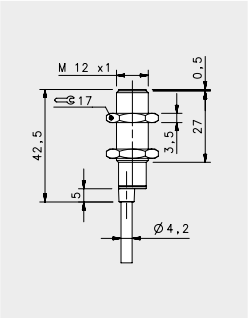

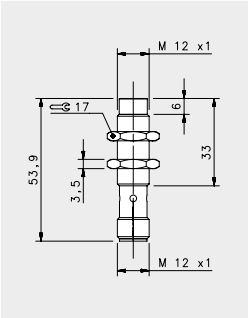

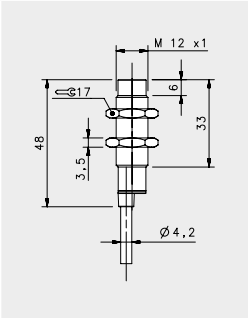

SHORT			
FLUSH		NON FLUSH	
M12 conn	cable	M12conn	cable
2 mm	**2 mm**	**4 mm**	**4 mm**
---	---	---	---
---	---	---	---
IS-12-B1-S2	IS-12-B1-03	IS-12-D1-S2	IS-12-D1-03
95B062051	95B062041	95B062451	95B062441
IS-12-B2-S2	IS-12-B2-03	IS-12-D2-S2	IS-12-D2-03
95B062081	95B062071	95B062481	95B062471
IS-12-B3-S2	IS-12-B3-03	IS-12-D3-S2	IS-12-D3-03
95B061991	95B061981	95B062391	95B062381
IS-12-B4-S2	IS-12-B4-03	IS-12-D4-S2	IS-12-D4-03
95B062021	95B062011	95B062421	95B062411
---	---	---	---
---	---	---	---
---	---	---	---
---	---	---	---
---	---	---	---
---	---	---	---
---	---	---	---
---	---	---	---
---	---	---	---
---	---	---	---
---	---	---	---
---	---	---	---
---	---	---	---
---	---	---	---
---	---	---	---
---	---	---	---
---	---	---	---
---	---	---	---
10-30 Vdc (-15/10%)	10-30 Vdc (-15/10%)	10-30 Vdc (-15/10%)	10-30 Vdc (-15/10%)
< 10%	< 10%	< 10%	< 10%
< 10%	< 10%	< 10%	< 10%
200 mA	200 mA	200 mA	200 mA
---	---	---	---
< 10 mA	< 10 mA	< 10 mA	< 10 mA
< 1,8 V (I=100mA)	< 1,8 V (I=100mA)	< 1,8 V (I=100mA)	< 1,8 V (I=100mA)
Yellow	Yellow	Yellow	Yellow
1000 Hz	1000 Hz	1000 Hz	1000 Hz
< 50 ms	< 50 ms	< 50 ms	< 50 ms
< 3%	< 3%	< 3%	< 3%
Present (self-resetting)	Present (self-resetting)	Present (self-resetting)	Present (self-resetting)
Against polarity reversal inductive loads	Against polarity reversal inductive loads	Against polarity reversal inductive loads	Against polarity reversal inductive loads
(-25 ... +60 °C)	(-25 ... +70 °C)	(-25 ... +60 °C)	(-25 ... +70 °C)
IP67	IP67	IP67	IP67
	2 m	---	2 m
	3 x 0,14 mm²	---	3 x 0,14 mm²
Nickel-plated brass	Nickel-plated brass	Nickel-plated brass	Nickel-plated brass
LCP	LCP	LCP	LCP
10Nm	10Nm	10Nm	10Nm
---	110 g	---	110 g
60 g	---	60 g	---

2 wires NO or NC

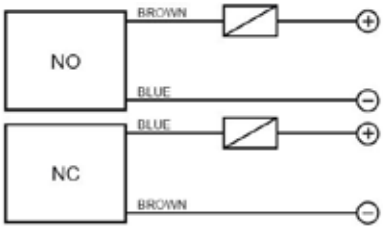

3 wires PNP or NPN

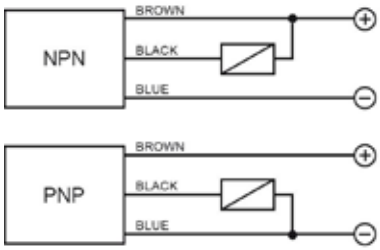

4 wires (PNP/NPN, NO/NC)

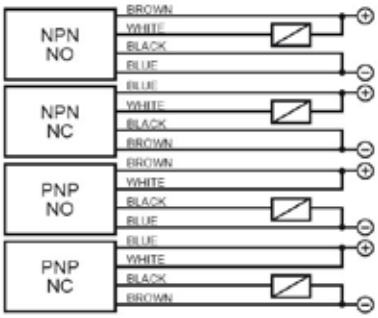

M12 connector - connections

2 wires NO or NC

CONTACTS CONFIGURATION

Available	Contacts numbers			
	1	2	3	4
NO	+		–	
NC	–		+	

3 wires

CONTACTS CONFIGURATION

Available	Contacts numbers			
	1	2	3	4
(NO or NC)	+		–	NO/NC

4 wires (PNP/NPN, NO/NC)

CONTACTS CONFIGURATION

Output	Contacts numbers			
	1	2	3	4
NPN NO	+	NO	–	–
NPN NC	–	NC	+	–
PNP NO	+	+	–	NO
PNP NC	–	+	+	NC

BASIC M12

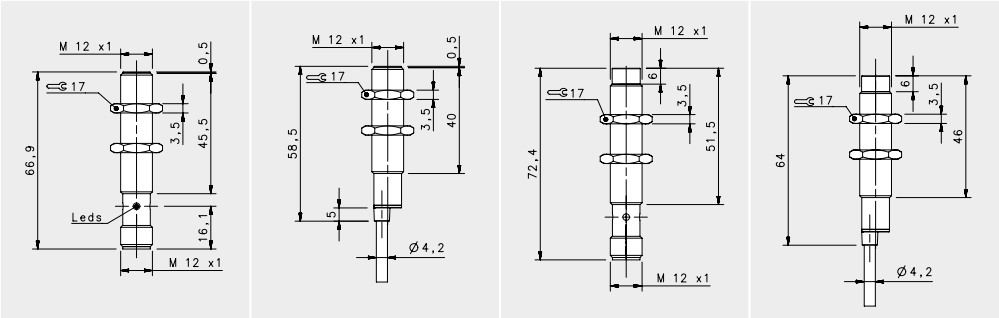

				STANDARD X2			
				FLUSH		NON FLUSH	
				M12 conn	cable	M12 conn	cable
NOMINAL SWITCHING DISTANCE				4 mm		8 mm	
10-30 Vdc	PNP/NPN NO-NC	4 wires		IS-12-E0-S2	IS-12-E0-03	IS-12-F0-S2	IS-12-F0-03
			order No.	95B067230	95B067190	95B067250	95B067210
10-30 Vdc	PNP NO	3 wires		IS-12-E1-S2	IS-12-E1-03	IS-12-F1-S2	IS-12-F1-03
			order No.	95B067030	95B067670	95B067020	95B067740
10-30 Vdc	PNP NC	3 wires		IS-12-E2-S2	IS-12-E2-03	IS-12-F2-S2	IS-12-F2-03
			order No.	95B067640	95B067680	95B067710	95B067750
10-30 Vdc	NPN NO	3 wires		IS-12-E3-S2	IS-12-E3-03	IS-12-F3-S2	IS-12-F3-03
			order No.	95B067650	95B067690	95B067720	95B067760
10-30 Vdc	NPN NC	3 wires		IS-12-E4-S2	IS-12-E4-03	IS-12-F4-S2	IS-12-F4-03
			order No.	95B067660	95B067700	95B067730	95B067770
10-30 Vdc	PNP NO-NC	4 wires		---	---	---	---
			order No.	---	---	---	---
10-30 Vdc	NPN NO-NC	4 wires		---	---	---	---
			order No.	---	---	---	---
10-30 Vdc	NO-NC	2 wires		IS-12-E9-S2	IS-12-E9-03	IS-12-F9-S2	IS-12-F9-03
			order No.	95B067240	95B067200	95B067260	95B067220
20-250 Vac/Vdc	NO	2 wires		---	---	---	---
			order No.	---	---	---	---
20-250 Vac/Vdc	NC	2 wires		---	---	---	---
			order No.	---	---	---	---
20-250 Vac	NO	2/3 wires		---	---	---	---
			order No.	---	---	---	---
10-30 Vdc	Analog 0-20 mA	3 wires		---	---	---	---
			order No.	---	---	---	---
NAMUR amplifier	NAMUR	2 wires		---	---	---	---
			order No.	---	---	---	---

Nominal Voltage	10-30 Vdc (-15/10%)	10-30 Vdc (-15/10%)	10-30 Vdc (-15/10%)	10-30 Vdc (-15/10%)
Residual Ripple	< 10%	< 10%	< 10%	< 10%
Hysteresis	< 10%	< 10%	< 10%	< 10%
Max. Output Current	100 mA	100 mA	100 mA	100 mA
Min. Output Current	---	---	---	---
Residual Current	< 10 mA	< 10 mA	< 10 mA	< 10 mA
Voltage Drop	< 1,2 V (I=100mA)	< 1,2 V (I=100mA)	< 1,2 V (I=100mA)	< 1,2 V (I=100mA)
Operation Led	Yellow	Yellow	Yellow	Yellow
Switching Frequency	500 Hz/200 Hz (2 wires NO-NC)	500 Hz/200 Hz (2 wires NO-NC)	400 Hz/200 Hz (2 wires NO-NC)	400 Hz/200 Hz (2 wires NO-NC)
Start Up Delay	< 75 ms	< 75 ms	< 75 ms	< 75 ms
Repeatability	< 3%	< 3%	< 3%	< 3%
Short Circuit Protection	Present (self-resetting)	Present (self-resetting)	Present (self-resetting)	Present (self-resetting)
Electric Protection	Against polarity reversal inductive loads	Against polarity reversal inductive loads	Against polarity reversal inductive loads	Against polarity reversal inductive loads
Temperature Limit	(-25 ... +70 °C)	(-25 ... +70 °C)	(-25 ... +70 °C)	(-25 ... +70 °C)
Protection Degree	IP67	IP67	IP67	IP67
Cable Length	---	---	---	---
Cable Section	---	2 x 0,34 mm² 3 x 0,14 mm² 4 x 0,25 mm²	---	2 x 0,34 mm² 3 x 0,14 mm² 4 x 0,25 mm²
Housing Material	Nickel-plated brass	Nickel-plated brass	Nickel-plated brass	Nickel-plated brass
Active face	LCP	LCP	LCP	LCP
Tightening torque	10Nm	10Nm	10Nm	10Nm
Weight - Cable Output	---	---	---	---
Weight - Connector Output	60 g	60 g	60 g	60 g

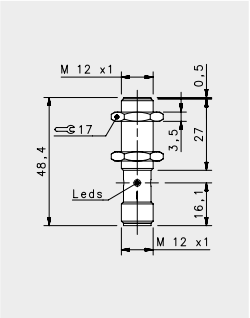

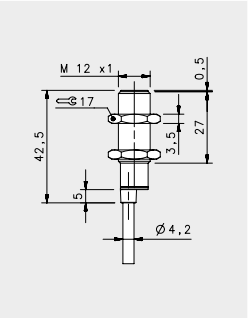

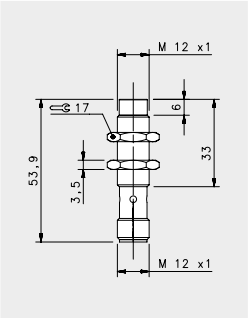

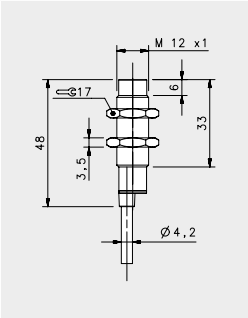

SHORT X2

FLUSH		NON FLUSH	
M12 con	cable	M12 conn	cable
4 mm	**4 mm**	**8 mm**	**8 mm**
---	---	---	---
---	---	---	---
IS-12-G1-S2	IS-12-G1-03	IS-12-H1-S2	IS-12-H1-03
95B063371	95B063361	95B063451	95B063441
IS-12-G2-S2	IS-12-G2-03	IS-12-H2-S2	IS-12-H2-03
95B063391	95B063381	95B063471	95B063461
IS-12-G3-S2	IS-12-G3-03	IS-12-H3-S2	IS-12-H3-03
95B063331	95B063321	95B063411	95B063401
IS-12-G4-S2	IS-12-G4-03	IS-12-H4-S2	IS-12-H4-03
95B063351	95B063341	95B063431	95B063421
IS-12-G5-S2	IS-12-G5-03	IS-12-H5-S2	IS-12-H5-03
95B062691	95B062681	95B062771	95B062761
IS-12-G6-S2	IS-12-G6-03	IS-12-H6-S2	IS-12-H6-03
95B062671	95B062661	95B062751	95B062741
---	---	---	---
---	---	---	---
---	---	---	---
---	---	---	---
---	---	---	---
---	---	---	---
---	---	---	---
---	---	---	---
---	---	---	---
---	---	---	---
---	---	---	---
---	---	---	---
10-30 Vdc (-15/10%)	10-30 Vdc (-15/10%)	10-30 Vdc (-15/10%)	10-30 Vdc (-15/10%)
< 10%	< 10%	< 10%	< 10%
< 10%	< 10%	< 10%	< 10%
200 mA	200 mA	200 mA	200 mA
> 1,6 mA (2wires ver.)	> 1,6 mA (2wires ver.)	> 1,6 mA (2wires ver.)	> 1,6 mA (2wires ver.)
< 10 mA	< 10 mA	< 10 mA	< 10 mA
< 1,2 V (I=100mA)	< 1,2 V (I=100mA)	< 1,2 V (I=100mA)	< 1,2 V (I=100mA)
Yellow	Yellow	Yellow	Yellow
500 Hz/200 Hz (4 wires NO-NC)	500 Hz/200 Hz (4 wires NO-NC)	500 Hz/200 Hz (4 wires NO-NC)	500 Hz/200 Hz (4 wires NO-NC)
< 75 ms	< 75 ms	< 75 ms	< 75 ms
< 3%	< 3%	< 3%	< 3%
Present (self-resetting)	Present (self-resetting)	Present (self-resetting)	Present (self-resetting)
Against polarity reversal inductive loads	Against polarity reversal inductive loads	Against polarity reversal inductive loads	Against polarity reversal inductive loads
(-25 ... +70 °C)	(-25 ... +70 °C)	(-25 ... +70 °C)	(-25 ... +70 °C)
IP67	IP67	IP67	IP67
---	2 m		2 m
---	3 x 0,14 mm² 4 x 0,25 mm²		3 x 0,14 mm² 4 x 0,25 mm²
Nickel-plated brass	Nickel-plated brass	Nickel-plated brass	Nickel-plated brass
LCP	LCP	LCP	LCP
10Nm	10Nm	10Nm	10Nm
---	110 g	---	110 g
60 g	---	60 g	---

2 wires NO or NC

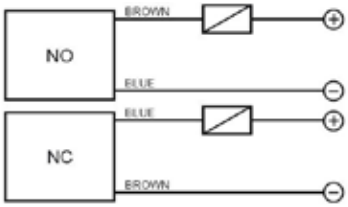

3 wires PNP or NPN

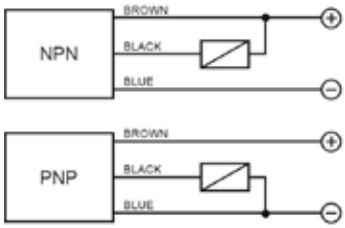

4 wires (PNP/NPN, NO/NC)

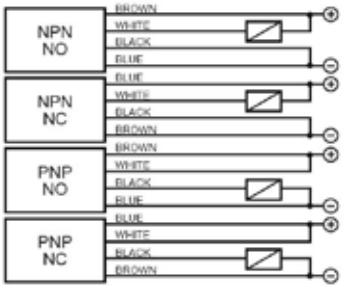

4 wires (NO+NC)

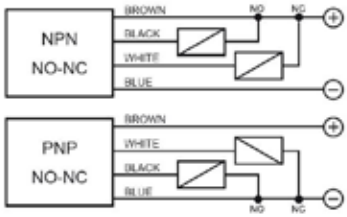

M12 connector *connections*

2 wires NO or NC

CONTACTS CONFIGURATION

Available	Contacts numbers			
	1	2	3	4
NO	+		–	
NC	–		+	

3 wires

CONTACTS CONFIGURATION

Available	Contacts numbers			
	1	2	3	4
(NO or NC)	+		–	NO/NC

4 wires (PNP/NPN, NO/NC)

CONTACTS CONFIGURATION

Output	Contacts numbers			
	1	2	3	4
NPN NO	+	NO	–	–
NPN NC	–	NC	+	–
PNP NO	+	+	–	NO
PNP NC	–	+	+	NC

4 wires (NO+NC)

Available	Contacts numbers			
	1	2	3	4
(NO + NC)	+	NC	–	NO

BASIC M18

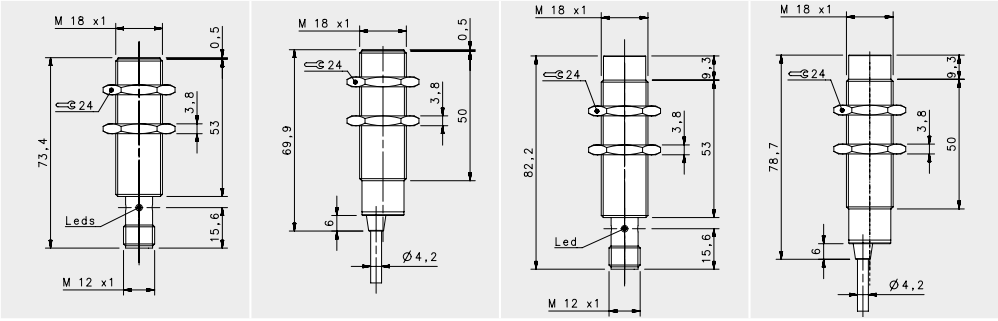

				STANDARD			
				FLUSH		NON FLUSH	
				M12 conn	cable	M12 conn	cable
NOMINAL SWITCHING DISTANCE				5 mm	5 mm	8 mm	8 mm
10-30 Vdc	PNP/NPN NO-NC	4 wires		IS-18-A0-S2	IS-18-A0-03	IS-18-C0-S2	IS-18-C0-03
			order No.	95B064260	95B064230	95B064280	95B064240
10-30 Vdc	PNP NO	3 wires		IS-18-A1-S2	IS-18-A1-03	IS-18-C1-S2	IS-18-C1-03
			order No.	95B061351	95B061341	95B061751	95B061741
10-30 Vdc	PNP NC	3 wires		IS-18-A2-S2	IS-18-A2-03	IS-18-C2-S2	IS-18-C2-03
			order No.	95B061371	95B061361	95B061771	95B061761
10-30 Vdc	NPN NO	3 wires		IS-18-A3-S2	IS-18-A3-03	IS-18-C3-S2	IS-18-C3-03
			order No.	95B061311	95B061301	95B061711	95B061701
10-30 Vdc	NPN NC	3 wires		IS-18-A4-S2	IS-18-A4-03	IS-18-C4-S2	IS-18-C4-03
			order No.	95B061331	95B061321	95B061731	95B061721
10-30 Vdc	PNP NO-NC	4 wires		---	---	---	---
			order No.	---	---	---	---
10-30 Vdc	NPN NO-NC	4 wires		---	---	---	---
			order No.	---	---	---	---
10-30 Vdc	NO-NC	2 wires		IS-18-A9-S2	S-18-A9-03	IS-18-C9-S2	IS-18-C9-03
			order No.	95B063941	95B064300	95B064340	95B064310
20-250 Vac/Vdc	NO	2 wires		---	---	---	---
			order No.	---	---	---	---
20-250 Vac/Vdc	NC	2 wires		---	---	---	---
			order No.	---	---	---	---
20-250 Vac	NO	2/3 wires		---	---	---	---
			order No.	---	---	---	---
10-30 Vdc	Analog 0-20 mA	3 wires		---	---	---	---
			order No.	---	---	---	---
NAMUR amplifier	NAMUR	2 wires		---	---	---	---
			order No.	---	---	---	---

Nominal Voltage	10-30 Vdc (-15/10%)	10-30 Vdc (-15/10%)	10-30 Vdc (-15/10%)	10-30 Vdc (-15/10%)
Residual Ripple	< 10%	< 10%	< 10%	< 10%
Hysteresis	< 10%	< 10%	< 10%	< 10%
Max. Output Current	200 mA	200 mA	200 mA	200 mA
Min. Output Current	> 1,6 mA (2wires ver.)	> 1,6 mA (2wires ver.)	> 1,6 mA (2wires ver.)	> 1,6 mA (2wires ver.)
Residual Current	< 10 mA	< 10 mA	< 10 mA	< 10 mA
Voltage Drop	< 1,8V; < 6,5 V (2wires ver.)	< 1,8V; < 6,5 V (2wires ver.)	< 1,8V; < 6,5 V (2wires ver.)	< 1,8V; < 6,5 V (2wires ver.)
Operation Led	Yellow	Yellow	Yellow	Yellow
Switching Frequency	1000 Hz/200 Hz (2 wires NO-NC)	1000 Hz/200 Hz (2 wires NO-NC)	1000 Hz/200 Hz (2 wires NO-NC)	1000 Hz/200 Hz (2 wires NO-NC)
Start Up Delay	< 50 ms	< 50 ms	< 50 ms	< 50 ms
Repeatability	< 3%	< 3%	< 3%	< 3%
Short Circuit Protection	Present (self-resetting)	Present (self-resetting)	Present (self-resetting)	Present (self-resetting)
Electric Protection	Against polarity reversal inductive loads	Against polarity reversal inductive loads	Against polarity reversal inductive loads	Against polarity reversal inductive loads
Temperature Limit	(-25 ... +60 °C)	(-25 ... +60 °C)	(-25 ... +60 °C)	(-25 ... +60 °C)
Protection Degree	IP67	IP67	IP67	IP67
Cable Length	---	2 m	---	2 m
Cable Section	---	2 x 0,34 mm² 3 x 0,14 mm² 4 x 0,25 mm²	---	2 x 0,34 mm² 3 x 0,14 mm² 4 x 0,25 mm²
Housing Material	Nickel-plated brass	Nickel-plated brass	Nickel-plated brass	Nickel-plated brass
Active face	LCP	LCP	LCP	LCP
Tightening torque	30Nm	30Nm	30Nm	30Nm
Weight - Cable Output	---	145g	---	145g
Weight - Connector Output	95g	---	95g	---

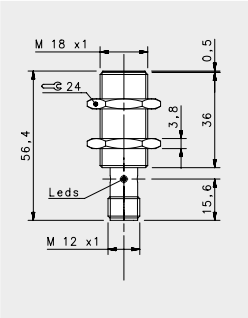

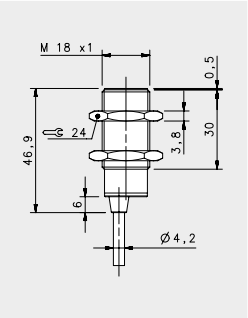

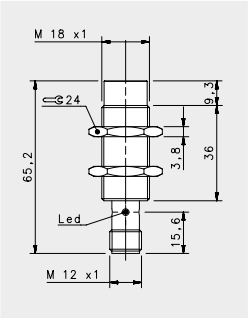

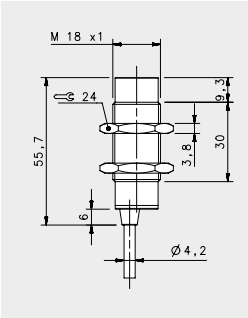

SHORT			
FLUSH		NON FLUSH	
M12 conn	cable	M12 conn	cable
5 mm	**5 mm**	**8 mm**	**8 mm**
---	---	---	---
---	---	---	---
IS-18-B1-S2	IS-18-B1-03	IS-18-D1-S2	IS-18-D1-03
95B062151	95B062141	95B062551	95B062541
IS-18-B2-S2	IS-18-B2-03	IS-18-D2-S2	IS-18-D2-03
95B062171	95B062161	95B062571	95B062561
IS-18-B3-S2	IS-18-B3-03	IS-18-D3-S2	IS-18-D3-03
95B062111	95B062101	95B062511	95B062501
IS-18-B4-S2	IS-18-B4-03	IS-18-D4-S2	IS-18-D4-03
95B062131	95B062121	95B062531	95B062521
---	---	---	---
---	---	---	---
---	---	---	---
---	---	---	---
---	---	---	---
---	---	---	---
---	---	---	---
---	---	---	---
---	---	---	---
---	---	---	---
---	---	---	---
---	---	---	---
---	---	---	---
---	---	---	---
---	---	---	---
---	---	---	---
---	---	---	---
10-30 Vdc (-15/10%)	10-30 Vdc (-15/10%)	10-30 Vdc (-15/10%)	10-30 Vdc (-15/10%)
< 10%	< 10%	< 10%	< 10%
< 10%	< 10%	< 10%	< 10%
200 mA	200 mA	200 mA	200 mA
---	---	---	---
< 10 mA	< 10 mA	< 10 mA	< 10 mA
< 1,8 V (I=100mA)	< 1,8 V (I=100mA)	< 1,8 V (I=100mA)	< 1,8 V (I=100mA)
Yellow	Yellow	Yellow	Yellow
1000 Hz	1000 Hz	1000 Hz	1000 Hz
< 50 ms	< 50 ms	< 50 ms	< 50 ms
< 3%	< 3%	< 3%	< 3%
Present (self-resetting)	Present (self-resetting)	Present (self-resetting)	Present (self-resetting)
Against polarity reversal inductive loads	Against polarity reversal inductive loads	Against polarity reversal inductive loads	Against polarity reversal inductive loads
(-25 ... +60 °C)	(-25 ... +60 °C)	(-25 ... +60 °C)	(-25 ... +60 °C)
IP67	IP67	IP67	IP67
---	2 m	---	2 m
---	3 x 0,14 mm²	---	3 x 0,14 mm²
Nickel-plated brass	Nickel-plated brass	Nickel-plated brass	Nickel-plated brass
LCP	LCP	LCP	LCP
30Nm	30Nm	30Nm	30Nm
---	145g	---	145g
95g	---	95g	---

2 wires NO or NC

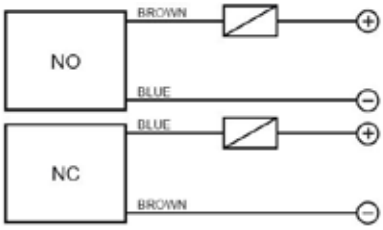

3 wires PNP or NPN

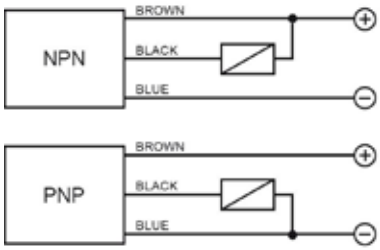

4 wires (PNP/NPN, NO/NC)

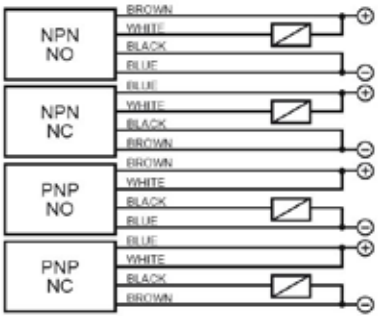

M12 connector - connections

2 wires NO or NC

CONTACTS CONFIGURATION

Available	Contacts numbers			
	1	2	3	4
NO	+		–	
NC	–		+	

3 wires

CONTACTS CONFIGURATION

Available	Contacts numbers			
	1	2	3	4
(NO or NC)	+		–	NO/NC

4 wires (PNP/NPN, NO/NC)

CONTACTS CONFIGURATION

Output	Contacts numbers			
	1	2	3	4
NPN NO	+	NO	–	–
NPN NC	–	NC	+	–
PNP NO	+	+	–	NO
PNP NC	–	+	+	NC

BASIC M18

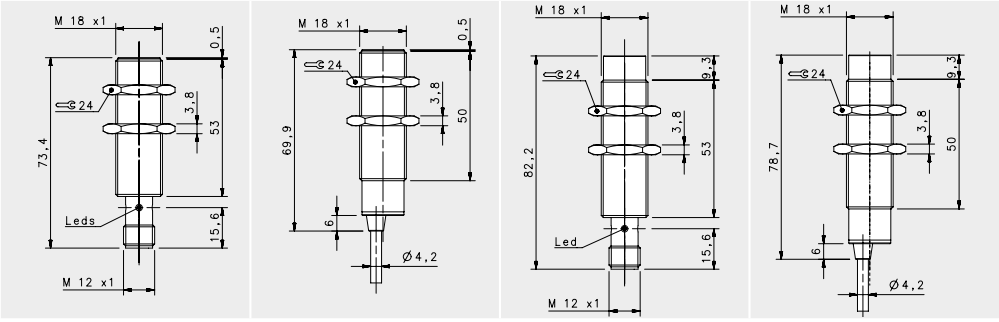

				STANDARD X2			
				FLUSH		NON FLUSH	
				M12 conn	cable	M12 conn	cable
NOMINAL SWITCHING DISTANCE				8 mm		14 mm	
10-30 Vdc	PNP/NPN NO-NC	4 wires		IS-18-E0-S2	IS-18-E0-03	IS-18-F0-S2	IS-18-F0-03
			order No.	95B067310	95B067270	95B067330	95B067290
10-30 Vdc	PNP NO	3 wires		IS-18-E1-S2	IS-18-E1-03	IS-18-F1-S2	IS-18-F1-03
			order No.	95B067050	95B067810	95B067040	95B067880
10-30 Vdc	PNP NC	3 wires		IS-18-E2-S2	IS-18-E2-03	IS-18-F2-S2	IS-18-F2-03
			order No.	95B067780	95B067820	95B067850	95B067890
10-30 Vdc	NPN NO	3 wires		IS-18-E3-S2	IS-18-E3-03	IS-18-F3-S2	IS-18-F3-03
			order No.	95B067790	95B067830	95B067860	95B067900
10-30 Vdc	NPN NC	3 wires		IS-18-E4-S2	IS-18-E4-03	IS-18-F4-S2	IS-18-F4-03
			order No.	95B067800	95B067840	95B067870	95B067910
10-30 Vdc	PNP NO-NC	4 wires		---	---	---	---
			order No.	---	---	---	---
10-30 Vdc	NPN NO-NC	4 wires		---	---	---	---
			order No.	---	---	---	---
10-30 Vdc	NO-NC	2 wires		IS-18-E9-S2	IS-18-E9-03	IS-18-F9-S2	IS-18-F9-03
			order No.	95B067320	95B067280	95B067340	95B067300
20-250 Vac/Vdc	NO	2 wires		---	---	---	---
			order No.	---	---	---	---
20-250 Vac/Vdc	NC	2 wires		---	---	---	---
			order No.	---	---	---	---
20-250 Vac	NO	2/3 wires		---	---	---	---
			order No.	---	---	---	---
10-30 Vdc	Analog 0-20 mA	3 wires		---	---	---	---
			order No.	---	---	---	---
NAMUR amplifier	NAMUR	2 wires		---	---	---	---
			order No.	---	---	---	---

Nominal Voltage	10-30 Vdc (-15/10%)	10-30 Vdc (-15/10%)	10-30 Vdc (-15/10%)	10-30 Vdc (-15/10%)
Residual Ripple	< 10%	< 10%	< 10%	< 10%
Hysteresis	< 10%	< 10%	< 10%	< 10%
Max. Output Current	200 mA	200 mA	200 mA	200 mA
Min. Output Current	---	---	---	---
Residual Current	< 10 mA	< 10 mA	< 10 mA	< 10 mA
Voltage Drop	< 1,2 V (I=100mA)	< 1,2 V (I=100mA)	< 1,2 V (I=100mA)	< 1,2 V (I=100mA)
Operation Led	Yellow	Yellow	Yellow	Yellow
Switching Frequency	400 Hz	400 Hz	100 Hz	100 Hz
Start Up Delay	< 50 ms	< 50 ms	< 50 ms	< 50 ms
Repeatability	< 3%	< 3%	< 3%	< 3%
Short Circuit Protection	Present (self-resetting)	Present (self-resetting)	Present (self-resetting)	Present (self-resetting)
Electric Protection	Against polarity reversal inductive loads	Against polarity reversal inductive loads	Against polarity reversal inductive loads	Against polarity reversal inductive loads
Temperature Limit	(-25 ... +70 °C)	(-25 ... +70 °C)	(-25 ... +70 °C)	(-25 ... +70 °C)
Protection Degree	IP67	IP67	IP67	IP67
Cable Length	---	---	---	---
Cable Section	---	2 x 0,34 mm² 3 x 0,14 mm² 4 x 0,25 mm²	---	2 x 0,34 mm² 3 x 0,14 mm² 4 x 0,25 mm²
Housing Material	Nickel-plated brass	Nickel-plated brass	Nickel-plated brass	Nickel-plated brass
Active face	LCP	LCP	LCP	LCP
Tightening torque	30Nm	30Nm	30Nm	30Nm
Weight - Cable Output	---	---	145g	145g
Weight - Connector Output	95g	95g	---	---

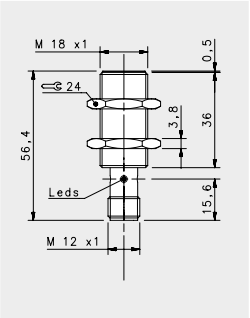

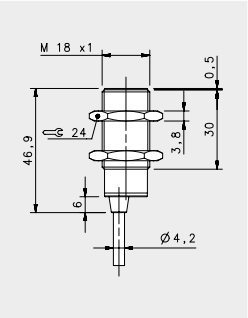

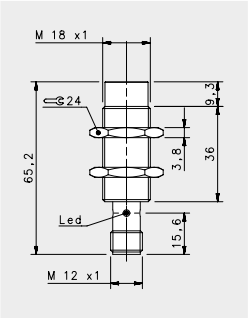

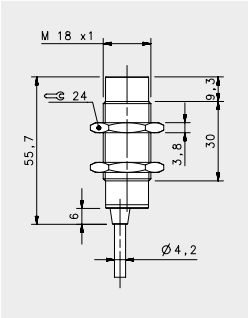

SHORT X2

FLUSH		NON FLUSH	
M12 conn	cable	M12 conn	cable
8 mm	**8 mm**	**14 mm**	**14 mm**
---	---	---	---
---	---	---	---
IS-18-G1-S2	IS-18-G1-03	IS-18-H1-S2	IS-18-H1-03
95B063531	95B063521	95B063611	95B063601
IS-18-G2-S2	IS-18-G2-03	IS-18-H2-S2	IS-18-H2-03
95B063551	95B063541	95B063631	95B063621
IS-18-G3-S2	IS-18-G3-03	IS-18-H3-S2	IS-18-H3-03
95B063491	95B063061	95B063571	95B063561
IS-18-G4-S2	IS-18-G4-03	IS-18-H4-S2	IS-18-H4-03
95B063511	95B063501	95B063591	95B063581
IS-18-G5-S2	IS-18-G5-03	IS-18-H5-S2	IS-18-H5-03
95B062731	95B062721	95B062811	95B064220
IS-18-G6-S2	IS-18-G6-03	IS-18-H6-S2	IS-18-H6-03
95B062711	95B064200	95B062791	95B064210
---	---	---	---
---	---	---	---
---	---	---	---
---	---	---	---
---	---	---	---
---	---	---	---
---	---	---	---
---	---	---	---
---	---	---	---
---	---	---	---
---	---	---	---
---	---	---	---
10-30 Vdc (-15/10%)	10-30 Vdc (-15/10%)	10-30 Vdc (-15/10%)	10-30 Vdc (-15/10%)
< 10%	< 10%	< 10%	< 10%
< 10%	< 10%	< 10%	< 10%
200 mA	200 mA	200 mA	200 mA
> 1,6 mA (2wires ver.)	> 1,6 mA (2wires ver.)	> 1,6 mA (2wires ver.)	> 1,6 mA (2wires ver.)
< 10 mA	< 10 mA	< 10 mA	< 10 mA
< 1,2 V (I=100mA)	< 1,2 V (I=100mA)	< 1,2 V (I=100mA)	< 1,2 V (I=100mA)
Yellow	Yellow	Yellow	Yellow
400 Hz/100 Hz (4 wires NO-NC)	400 Hz/100 Hz (4 wires NO-NC)	400 Hz/100 Hz (4 wires NO-NC)	400 Hz/100 Hz (4 wires NO-NC)
< 75 ms	< 75 ms	< 75 ms	< 75 ms
< 3%	< 3%	< 3%	< 3%
Present (self-resetting)	Present (self-resetting)	Present (self-resetting)	Present (self-resetting)
Against polarity reversal inductive loads	Against polarity reversal inductive loads	Against polarity reversal inductive loads	Against polarity reversal inductive loads
(-25 ... +60 °C)	(-25 ... +70 °C)	(-25 ... +60 °C)	(-25 ... +70 °C)
IP67	IP67	IP67	IP67
---	2 m	---	2 m
---	3 x 0,14 mm² 4 x 0,25 mm²	---	3 x 0,14 mm² 4 x 0,25 mm²
Nickel-plated brass	Nickel-plated brass	Nickel-plated brass	Nickel-plated brass
LCP	LCP	LCP	LCP
30Nm	30Nm	30Nm	30Nm
---	145g	---	145g
95g	---	95g	---

2 wires NO or NC

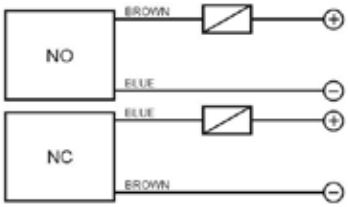

3 wires PNP or NPN

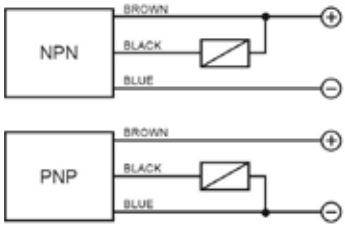

4 wires (PNP/NPN, NO/NC)

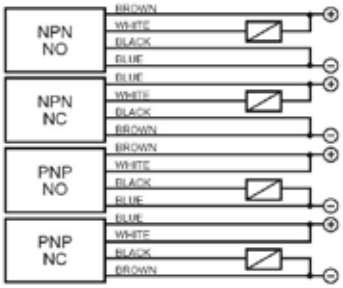

4 wires (NO+NC)

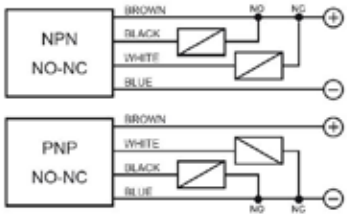

M12 connector *connections*

2 wires NO or NC

CONTACTS CONFIGURATION

Available	Contacts numbers			
	1	2	3	4
NO	+		–	
NC	–		+	

3 wires

CONTACTS CONFIGURATION

Available	Contacts numbers			
	1	2	3	4
(NO or NC)	+		–	NO/NC

4 wires (PNP/NPN, NO/NC)

CONTACTS CONFIGURATION

Output	Contacts numbers			
	1	2	3	4
NPN NO	+	NO	–	–
NPN NC	–	NC	+	–
PNP NO	+	+	–	NO
PNP NC	–	+	+	NC

4 wires (NO+NC)

Available	Contacts numbers			
	1	2	3	4
(NO + NC)	+	NC	–	NO

BASIC M30

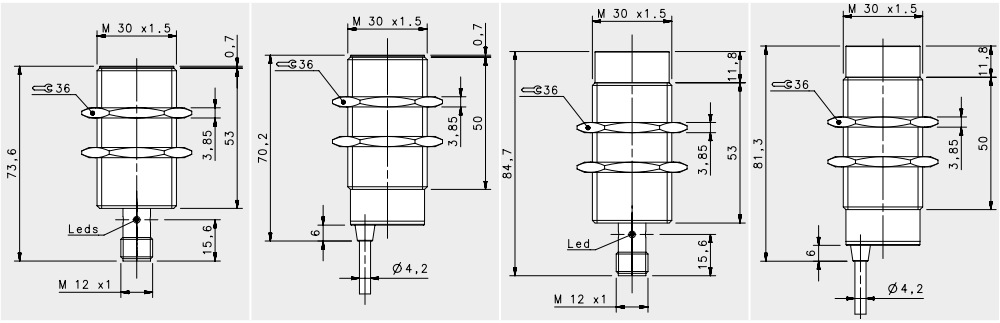

				STANDARD			
				FLUSH		NON FLUSH	
				M12 conn	cable	M12 conn	cable
NOMINAL SWITCHING DISTANCE				**10 mm**	**10 mm**	**15 mm**	**15 mm**
10-30 Vdc	PNP/NPN NO-NC	4 wires		IS-30-A0-S2	IS-30-A0-03	IS-30-C0-S2	IS-30-C0-03
			order No.	95B064490	95B064460	95B064510	95B064470
10-30 Vdc	PNP NO	3 wires		IS-30-A1-S2	IS-30-A1-03	IS-30-C1-S2	IS-30-C1-03
			order No.	95B061431	95B061421	95B061831	95B061821
10-30 Vdc	PNP NC	3 wires		IS-30-A2-S2	IS-30-A2-03	IS-30-C2-S2	IS-30-C2-03
			order No.	95B061451	95B061441	95B061851	95B061841
10-30 Vdc	NPN NO	3 wires		IS-30-A3-S2	IS-30-A3-03	IS-30-C3-S2	IS-30-C3-03
			order No.	95B061391	95B061381	95B061791	95B061781
10-30 Vdc	NPN NC	3 wires		IS-30-A4-S2	IS-30-A4-03	IS-30-C4-S2	IS-30-C4-03
			order No.	95B061411	95B061401	95B061811	95B061801
10-30 Vdc	PNP NO-NC	4 wires		---	---	---	---
			order No.	---	---	---	---
10-30 Vdc	NPN NO-NC	4 wires		---	---	---	---
			order No.	---	---	---	---
10-30 Vdc	NO-NC	2 wires		IS-30-A9-S2	IS-30-A9-03	IS-30-C9-S2	IS-30-C9-03
			order No.	95B064570	95B064530	95B064590	95B064550
20-250 Vac/Vdc	NO	2 wires		---	---	---	---
			order No.	---	---	---	---
20-250 Vac/Vdc	NC	2 wires		---	---	---	---
			order No.	---	---	---	---
20-250 Vac	NO	2/3 wires		---	---	---	---
			order No.	---	---	---	---
10-30 Vdc	Analog 0-20 mA	3 wires		---	---	---	---
			order No.	---	---	---	---
NAMUR amplifier	NAMUR	2 wires		---	---	---	---
			order No.	---	---	---	---

Nominal Voltage	10-30 Vdc (-15/10%)	10-30 Vdc (-15/10%)	10-30 Vdc (-15/10%)	10-30 Vdc (-15/10%)
Residual Ripple	< 10%	< 10%	< 10%	< 10%
Hysteresis	< 10%	< 10%	< 10%	< 10%
Max. Output Current	200mA; 100 mA (2wires)	200mA; 100 mA (2wires)	200mA; 100 mA (2wires)	200mA; 100 mA (2wires)
Min. Output Current	> 1,6 mA (2wires)	> 1,6 mA (2wires)	> 1,6 mA (2wires)	> 1,6 mA (2wires)
Residual Current	< 1,6 mA	< 1,6 mA	< 1,6 mA	< 1,6 mA
Voltage Drop	< 1,8V; < 6,5 V (2wires)	< 1,8V; < 6,5 V (2wires)	< 1,8V; < 6,5 V (2wires)	< 1,8V; < 6,5 V (2wires)
Operation Led	Yellow	Yellow	Yellow	Yellow
Switching Frequency	300 Hz/250 Hz (2 wires NO-NC)	300 Hz/250 Hz (2 wires NO-NC)	300 Hz/250 Hz (2 wires NO-NC)	300 Hz/250 Hz (2 wires NO-NC)
Start Up Delay	< 50 ms	< 50 ms	< 50 ms	< 50 ms
Repeatability	< 3%	< 3%	< 3%	< 3%
Short Circuit Protection	Present (self-resetting)	Present (self-resetting)	Present (self-resetting)	Present (self-resetting)
Electric Protection	Against polarity reversal inductive loads	Against polarity reversal inductive loads	Against polarity reversal inductive loads	Against polarity reversal inductive loads
Temperature Limit	(-25 ... +70 °C)	(-25 ... +70 °C)	(-25 ... +70 °C)	(-25 ... +70 °C)
Protection Degree	IP67	IP67	IP67	IP67
Cable Length	---	2 m	---	2 m
Cable Section	---	2 x 0,34 mm² 3 x 0,14 mm² 4 x 0,25 mm²	---	2 x 0,34 mm² 3 x 0,14 mm² 4 x 0,25 mm²
Housing Material	Nickel-plated brass	Nickel-plated brass	Nickel-plated brass	Nickel-plated brass
Active face	LCP	LCP	LCP	LCP
Tightening torque	60Nm	60Nm	60Nm	60Nm
Weight - Cable Output	---	210 g	---	210 g
Weight - Connector Output	170 g	---	170 g	---

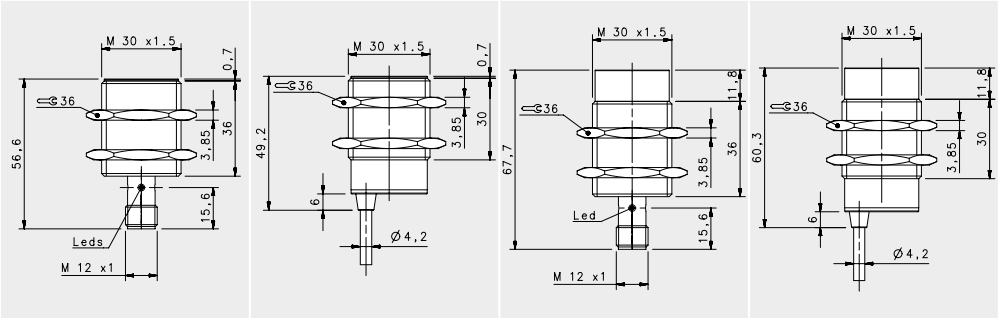

SHORT			
FLUSH		NON FLUSH	
M12 conn	cable	M12 conn	cable
10 mm	**10 mm**	**15 mm**	**15 mm**
---	---	---	---
---	---	---	---
IS-30-B1-S2	IS-30-B1-03	IS-30-D1-S2	IS-30-D1-03
95B062231	95B062221	95B062631	95B062621
IS-30-B2-S2	IS-30-B2-03	IS-30-D2-S2	IS-30-D2-03
95B062251	95B062241	95B062651	95B062641
IS-30-B3-S2	IS-30-B3-03	IS-30-D3-S2	IS-30-D3-03
95B062191	95B062181	95B062591	95B062581
IS-30-B4-S2	IS-30-B4-03	IS-30-D4-S2	IS-30-D4-03
95B062211	95B062201	95B062611	95B062601
---	---	---	---
---	---	---	---
---	---	---	---
---	---	---	---
---	---	---	---
---	---	---	---
---	---	---	---
---	---	---	---
---	---	---	---
---	---	---	---
---	---	---	---
---	---	---	---
---	---	---	---
---	---	---	---
---	---	---	---
---	---	---	---
10-30 Vdc (-15/10%)	10-30 Vdc (-15/10%)	10-30 Vdc (-15/10%)	10-30 Vdc (-15/10%)
< 10%	< 10%	< 10%	< 10%
< 10%	< 10%	< 10%	< 10%
200 mA	200 mA	200 mA	200 mA
---	---	---	---
< 10 mA	< 10 mA	< 10 mA	< 10 mA
< 1,8 V (I=100mA)	< 1,8 V (I=100mA)	< 1,8 V (I=100mA)	< 1,8 V (I=100mA)
Yellow	Yellow	Yellow	Yellow
300 Hz	300 Hz	300 Hz	300 Hz
< 50 ms	< 50 ms	< 50 ms	< 50 ms
< 3%	< 3%	< 3%	< 3%
Present (self-resetting)	Present (self-resetting)	Present (self-resetting)	Present (self-resetting)
Against polarity reversal inductive loads	Against polarity reversal inductive loads	Against polarity reversal inductive loads	Against polarity reversal inductive loads
(-25 ... +60 °C)	(-25 ... +60 °C)	(-25 ... +60 °C)	(-25 ... +60 °C)
IP67	IP67	IP67	IP67
---	2 m	---	2 m
---	3 x 0,14 mm²	---	3 x 0,14 mm²
Nickel-plated brass	Nickel-plated brass	Nickel-plated brass	Nickel-plated brass
LCP	LCP	LCP	LCP
60Nm	60Nm	60Nm	60Nm
---	210 g	---	210 g
170 g	---	170 g	---

2 wires NO or NC

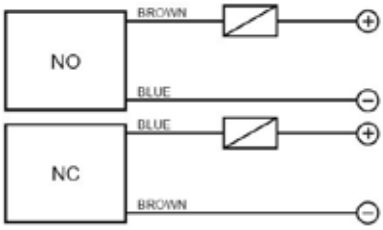

3 wires PNP or NPN

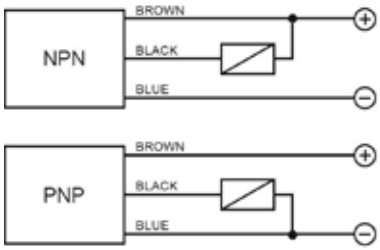

4 wires (PNP/NPN, NO/NC)

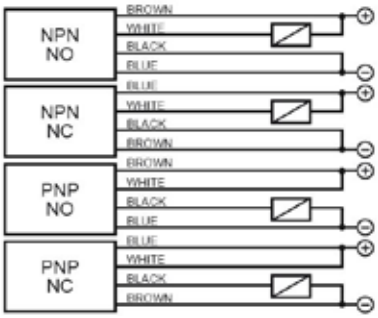

M12 connector - connections

2 wires NO or NC

CONTACTS CONFIGURATION

Available	Contacts numbers			
	1	2	3	4
NO	+		–	
NC	–		+	

3 wires

CONTACTS CONFIGURATION

Available	Contacts numbers			
	1	2	3	4
(NO or NC)	+		–	NO/NC

4 wires (PNP/NPN, NO/NC)

CONTACTS CONFIGURATION

Output	Contacts numbers			
	1	2	3	4
NPN NO	+	NO	–	–
NPN NC	–	NC	+	–
PNP NO	+	+	–	NO
PNP NC	–	+	+	NC

BASIC M30

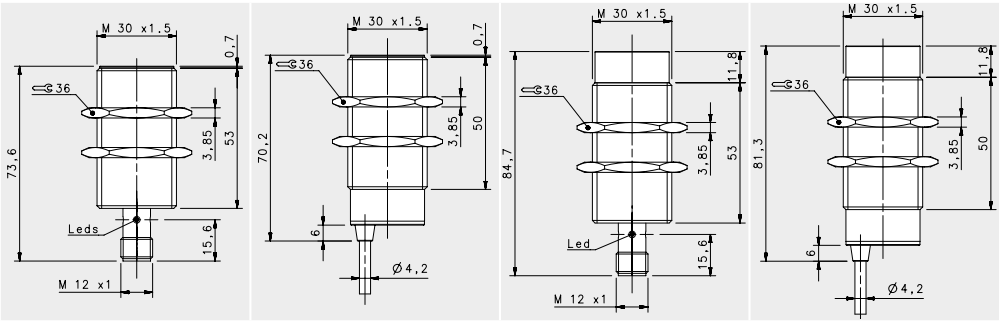

				STANDARD X2			
				FLUSH		NON-FLUSH	
				M12 conn	cable	M12 conn	cable
NOMINAL SWITCHING DISTANCE				**15mm**	**15mm**	**20 mm**	**20 mm**
10-30 Vdc	PNP/NPN NO-NC	4 wires		IS-30-E0-S2	IS-30-E0-03	IS-30-F0-S2	IS-30-F0-03
			order No.	95B067390	95B067350	95B067410	95B067370
10-30 Vdc	PNP NO	3 wires		IS-30-E1-S2	IS-30-E1-03	IS-30-F1-S2	IS-30-F1-03
			order No.	95B067060	95B067950	95B067990	95B068030
10-30 Vdc	PNP NC	3 wires		IS-30-E2-S2	IS-30-E2-03	IS-30-F2-S2	IS-30-F2-03
			order No.	95B067920	95B067960	95B068000	95B068040
10-30 Vdc	NPN NO	3 wires		IS-30-E3-S2	IS-30-E3-03	IS-30-F3-S2	IS-30-F3-03
			order No.	95B067930	95B067970	95B068010	95B068050
10-30 Vdc	NPN NC	3 wires		IS-30-E4-S2	IS-30-E4-03	IS-30-F4-S2	IS-30-F4-03
			order No.	95B067940	95B067980	95B068020	95B068060
10-30 Vdc	PNP NO-NC	4 wires		---	---	---	---
			order No.	---	---	---	---
10-30 Vdc	NPN NO-NC	4 wires		---	---	---	---
			order No.	---	---	---	---
10-30 Vdc	NO-NC	2 wires		IS-30-E9-S2	IS-30-E9-03	IS-30-F9-S2	IS-30-F9-03
			order No.	95B067400	95B067360	95B067420	95B067380
20-250 Vac/Vdc	NO	2 wires		---	---	---	---
			order No.	---	---	---	---
20-250 Vac/Vdc	NC	2 wires		---	---	---	---
			order No.	---	---	---	---
20-250 Vac	NO	2/3 wires		---	---	---	---
			order No.	---	---	---	---
10-30 Vdc	Analog 0-20 mA	3 wires		---	---	---	---
			order No.	---	---	---	---
NAMUR amplifier	NAMUR	2 wires		---	---	---	---
			order No.	---	---	---	---

Nominal Voltage	10-30 Vdc (-15/10%)	10-30 Vdc (-15/10%)	10-30 Vdc (-15/10%)	10-30 Vdc (-15/10%)
Residual Ripple	< 10%	< 10%	< 10%	< 10%
Hysteresis	< 10%	< 10%	< 10%	< 10%
Max. Output Current	200 mA	200 mA	200 mA	200 mA
Min. Output Current	---	---	---	---
Residual Current	< 10 mA	< 10 mA	< 10 mA	< 10 mA
Voltage Drop	< 6,5 V (I=100mA)	< 6,5 V (I=100mA)	< 6,5 V (I=100mA)	< 6,5 V (I=100mA)
Operation Led	Yellow	Yellow	Yellow	Yellow
Switching Frequency	200 Hz/100 Hz (2 wires NO-NC)	200 Hz/100 Hz (2 wires NO-NC)	200 Hz/100 Hz (2 wires NO-NC)	200 Hz/100 Hz (2 wires NO-NC)
Start Up Delay	< 75 ms	< 75 ms	< 75 ms	< 75 ms
Repeatability	< 3%	< 3%	< 3%	< 3%
Short Circuit Protection	Present (self-resetting)	Present (self-resetting)	Present (self-resetting)	Present (self-resetting)
Electric Protection	Against polarity reversal inductive loads	Against polarity reversal inductive loads	Against polarity reversal inductive loads	Against polarity reversal inductive loads
Temperature Limit	(-25 ... +70 °C)	(-25 ... +70 °C)	(-25 ... +70 °C)	(-25 ... +70 °C)
Protection Degree	IP67	IP67	IP67	IP67
Cable Length	---	---	---	---
Cable Section	---	2 x 0,34 mm² 3 x 0,14 mm² 4 x 0,25 mm²	---	2 x 0,34 mm² 3 x 0,14 mm² 4 x 0,25 mm²
Housing Material	Nickel-plated brass	Nickel-plated brass	Nickel-plated brass	Nickel-plated brass
Active face	LCP	LCP	LCP	LCP
Tightening torque	60Nm	60Nm	60Nm	60Nm
Weight - Cable Output	---	---	---	---
Weight - Connector Output	170 g	170 g	170 g	170 g

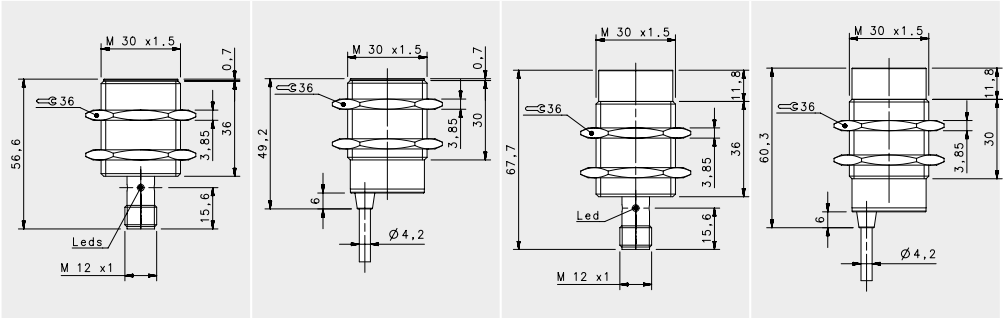

SHORT X2

FLUSH		NON FLUSH	
M12 conn	cable	M12 conn	cable
15mm	**15mm**	**20 mm**	**20 mm**
---	---	---	---
---	---	---	---
IS-30-G1-S2	IS-30-G1-03	IS-30-H1-S2	IS-30-H1-03
95B063691	95B063681	95B063771	95B063761
IS-30-G2-S2	IS-30-G2-03	IS-30-H2-S2	IS-30-H2-03
95B063711	95B063701	95B063791	95B063781
IS-30-G3-S2	IS-30-G3-03	IS-30-H3-S2	IS-30-H3-03
95B063651	95B063641	95B063731	95B063721
IS-30-G4-S2	IS-30-G4-03	IS-30-H4-S2	IS-30-H4-03
95B063671	95B063661	95B063751	95B063741
IS-30-G5-S2	IS-30-G5-03	IS-30-H5-S2	IS-30-H5-03
95B063831	95B063821	95B064450	95B064420
IS-30-G6-S2	IS-30-G6-03	IS-30-H6-S2	IS-30-H6-03
95B064430	95B064400	95B064440	95B064410
---	---	---	---
---	---	---	---
---	---	---	---
---	---	---	---
---	---	---	---
---	---	---	---
---	---	---	---
---	---	---	---
---	---	---	---
---	---	---	---
---	---	---	---
---	---	---	---
10-30 Vdc (-15/10%)	10-30 Vdc (-15/10%)	10-30 Vdc (-15/10%)	10-30 Vdc (-15/10%)
< 10%	< 10%	< 10%	< 10%
< 10%	< 10%	< 10%	< 10%
200 mA	200 mA	200 mA	200 mA
---	---	---	---
< 10 mA	< 10 mA	< 10 mA	< 10 mA
< 1,2 V (I=100mA)	< 1,2 V (I=100mA)	< 1,2 V (I=100mA)	< 1,2 V (I=100mA)
Yellow	Yellow	Yellow	Yellow
200 Hz	200 Hz	200 Hz	200 Hz
< 75 ms	< 75 ms	< 75 ms	< 75 ms
< 3%	< 3%	< 3%	< 3%
Present (self-resetting)	Present (self-resetting)	Present (self-resetting)	Present (self-resetting)
Against polarity reversal inductive loads	Against polarity reversal inductive loads	Against polarity reversal inductive loads	Against polarity reversal inductive loads
(-25 ... +70 °C)	(-25 ... +70 °C)	(-25 ... +70 °C)	(-25 ... +70 °C)
IP67	IP67	IP67	IP67
---	2 m	---	2 m
---	3 x 0,14 mm² 4 x 0,25 mm²	---	3 x 0,14 mm² 4 x 0,25 mm²
Nickel-plated brass	Nickel-plated brass	Nickel-plated brass	Nickel-plated brass
LCP	LCP	LCP	LCP
60Nm	60Nm	60Nm	60Nm
---	210 g	---	210 g
170 g	---	170 g	---

2 wires NO or NC

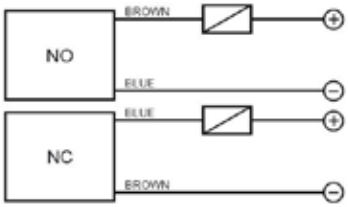

3 wires PNP or NPN

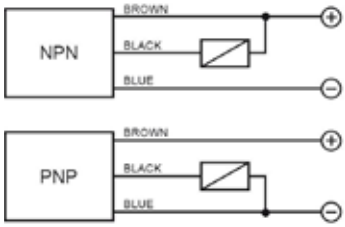

4 wires (PNP/NPN, NO/NC)

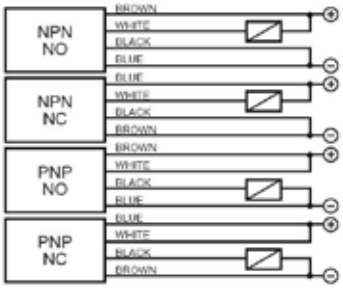

4 wires (NO+NC)

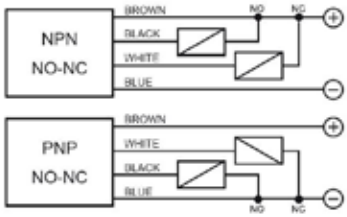

M12 connector *connections*

2 wires NO or NC

CONTACTS CONFIGURATION

Available	Contacts numbers			
	1	2	3	4
NO	+		–	
NC	–		+	

3 wires

CONTACTS CONFIGURATION

Available	Contacts numbers			
	1	2	3	4
(NO or NC)	+		–	NO/NC

4 wires (PNP/NPN, NO/NC)

CONTACTS CONFIGURATION

Output	Contacts numbers			
	1	2	3	4
NPN NO	+	NO	–	–
NPN NC	–	NC	+	–
PNP NO	+	+	–	NO
PNP NC	–	+	+	NC

4 wires (NO+NC)

Available	Contacts numbers			
	1	2	3	4
(NO + NC)	+	NC	–	NO